Seica
Test Solutions

VIP
VIVA INTEGRATED PLATFORM

WWW.SEICA.COM

VIVA System Macros

VIVA

System Macros

PUBLICATION ISSUED BY:

Via Kennedy, 24 - 10019 STRAMBINO (TO)
Phone: +39 0125 63 68 11
Fax: +39 0125 63 68 99
e-mail: seica@seica.com
Web site: http://www.seica.com

Copyright © 2012
All rights reserved

Microsoft Windows is a trademark of Microsoft Corporation

Document code: MA-VI-VIVAMSEN-03
Release software: VIVA Rel. 2.3.2.4 for Windows 2000/XP
Date of issue: 2012 - 12 - 18

Seica S.p.A.* reserves the right to change the technical specifications without notice.

CONTENTS

CONTENTS I
LIST OF TABLES II
LIST OF FIGURES III
LIST OF FIGURES III
ACHRONYMS IV
1 VIVA Macros 1-1
1.1 Testing systems, hardware/software context and measurement methods 1-2
1.1.1 Hardware context 1-2
1.1.2 Software Context 1-3
1.1.3 Measurement methods 1-4
1.2 Programming Environment (CTRL+P) 1-5
1.3 Functional Programming Environment (CTRL+F) 1-6
1.4 Debug Environment (CTRL+D) 1-7
2 List of VIVA Macros and parameters descriptions 2-1
2.1 Parameters with common meaning to several system macros 2-2
2.2 RESISTOR 2-4
2.3 CAPACITOR 2-9
2.4 INDUCTOR 2-13
2.5 TRANSFORMER 2-16
2.6 RELAYS 2-19
2.7 DIODE (DIODE_INV, DIODE2, DIODE2_INV) 2-22
2.8 ZENER (ZENER_DIR) 2-26
2.9 SCR_ON (SCR_OFF, SCR_ON_INV, SCR_OFF_INV) 2-30
2.10 TRIAC_ON (TRIAC_OFF, TRIAC_ON_INV, TRIAC_OFF_INV) 2-33
2.11 TRANSISTOR 2-36
2.12 FNODE 2-40
2.12.1 FNODE macro optimizations 2-47
2.13 JUMPER 2-50
2.14 FUSE 2-52
2.15 CRYSTAL 2-54
2.16 OPTOISOLATOR 2-56
2.17 VOLTAGE_REG 2-59
2.18 POWER 2-62
2.19 POWER_CHECK 2-65
2.20 AUTIC 2-67
2.21 JSCAN 2-70
2.21.1 JSCAN function and system macro used 2-74
2.22 OPENFIX 2-75
2.22.1 Function OpenFix and system macro used 2-78
2.23 CONTINUITY 2-79
2.24 ISOLATION 2-81
2.25 SHORT 2-84
2.25.1 Function “Short” “MEMO Parameters” for SHORT macro 2-86
2.26 CONTACT 2-87
2.26.1 Function “Contact” “MEMO Parameters” for macro CONTACT 2-89
2.27 COMPARATOR 2-90
2.28 OP_AMP_VF 2-94
2.29 OP_AMP_GAIN 2-97
2.30 GATE 2-101
2.31 DIGPIN 2-107
2.31.1 “MEMO Parameters” for DIGPIN macro 2-110
2.31.1.1 MEMO Parameters - DIGPIN 2-110
2.31.1.2 MEMO Parameters - ReportData 2-112
2.31.1.3 MEMO Parameters - ReportDataAutolearn 2-113
2.31.1.4 Test strategies with DIGPIN macros 2-114
2.32 CLUSTER 2-116
2.33 CLUSTERDIAG 2-118

2.34 ASKUSER 2-120
2.35 MESSAGE 2-123
2.36 DISCHARGE 2-125
2.37 _SOLD1 2-127
2.38 _SOLD 2-131
3 Appendix 3-1
3.1 List of system macros and related parameters 3-2
3.1.1 RESISTOR (macro written in C language) 3-2
3.1.2 CAPACITOR (macro written in C language) 3-3
3.1.3 INDUCTOR (macro written in C language) 3-4
3.1.4 TRANSORMER (macro written in VL) 3-5
3.1.5 RELAIS (macro written in VL) 3-6
3.1.6 DIODE (DIODE_INV, DIODE2, DIODE2_INV) (macro written in C language) 3-7
3.1.7 ZENER (ZENER_DIR) (macro written in C language) 3-8
3.1.8 SCR_ON (SCR_OFF, SCR_ON_INV, SCR_OFF_INV) (macro written in VL) 3-9
3.1.9 TRIAC_ON (TRIAC_OFF, TRIAC_ON_INV, TRIAC_OFF_INV) (macro written in VL) 3-10
3.1.10 TRANSISTOR (macro written in C language) 3-11
3.1.11 FNODE (macro written in C language) 3-12
3.1.12 JUMPER macro written in VNL) 3-13
3.1.13 FUSE (macro written in VNL) 3-14
3.1.14 CRYSTAL (macro written in VL) 3-15
3.1.15 OPTOISOLATOR (macro written in VL) 3-16
3.1.16 VOLTAGE_REG (macro written in VL) 3-17
3.1.17 POWER (macro written in VL) 3-18
3.1.18 POWER_CHECK (macro written in VL) 3-19
3.1.19 AUTIC (macro written in C language) 3-20
3.1.20 JSCAN (macro written in C language) 3-21
3.1.21 OPENFIX (macro written in C language) 3-22
3.1.22 CONTINUITY (macro written in C language) 3-23
3.1.23 ISOLATION (macro written in C language) 3-24
3.1.24 SHORT (macro written in C language) 3-25
3.1.25 CONTACT (macro written in C language) 3-26
3.1.26 COMPARATOR (macro written in VL) 3-27
3.1.27 OP_AMP_VF (macro written in VL) 3-28
3.1.28 OP_AMP_GAIN (macro written in VL) 3-29
3.1.29 GATE (macro written in VL) 3-30
3.1.30 DIGPIN (macro written in VL) 3-31
3.1.31 CLUSTER (macro written in VL) 3-32
3.1.32 CLUSTERDIA (macro written in VL) 3-33
3.1.33 ASKUSER (macro written in VBS) 3-34
3.1.34 MESSAGE (macro written in VBS) 3-35
3.1.35 DISCHARGE (macro written in C) 3-36
3.1.36 _SOLD1 (macro written in C language) 3-37
3.1.37 _SOLD (macro written in C language) 3-38
3.2 Functions in Programming Environment 3-39
3.2.1 Complex functions and devices 3-48
3.3 System macro use 3-49
3.3.1 Add functions to the board data base 3-54
3.3.2 Add a complex device to the board data base 3-54
3.3.3 Assign a device to a complex device 3-56
3.3.4 Assign a component to a complex device 3-57
3.3.5 Changing the system macros belonging to a function 3-58
3.3.6 Assign a function to a component 3-58
3.3.7 Insert a cluster from Debug Environment 3-59
3.3.8 Add a new component in the board data base 3-60
4 Bibliography 4-1

LIST OF TABLES

Tab. 2-1 - VIVA: Executed Tests and Optimization 2-49
Tab. 3-1 - VIVA: macros and parameters 3-2
Tab. 3-2 - VIVA: macros and functions 3-46

LIST OF FIGURES[1]

Fig. 1-1 - VIVA: Abstraction Layers 1-2
Fig. 1-2 - VIVA: System Macros and hardware/software context 1-3
Fig. 1-3 - VIVA: modes and wires in the measure of components 1-4
Fig. 1-4 - VIVA: Display Macro parameters in "Debug Environment" 1-8
Fig. 1-5 - VIVA: Internal Instruments and System Channels 1-9
Fig. 1-6 - VIVA: Component measurement and guarding 1-11
Fig. 2-1 - VIVA: Voltage and Current on a bipole 2-41
Fig. 2-2 - VIVA: "Advanced Create Program Settings" 2-47
Fig. 2-3 - VIVA: Choosing Fnode Optimization 2-48
Fig. 2-4 - VIVA: Advanced Test Settings 2-49
Fig. 2-5 - VIVA: Example of User Power Settings for PW1-PW8 and PW9-PW16 2-64
Fig. 2-6 - VIVA: JSCAN Drivers, parallel resistors, parallel capacitors and voltage meter 2-73
Fig. 2-7 - VIVA: JSCAN function, related macros and "TestPinIso" parameters. 2-73
Fig. 2-8 - VIVA: JSCAN Test Result with "SPLIT"="NO" and "SPLIT"="YES" 2-74
Fig. 2-9 - VIVA: OPENFIX, Fixed and Mobile capacitive Sensors 2-75
Fig. 2-10 –TTL standard family: Voltage levels 2-106
Fig. 2-11 - VIVA: Electrical connection between the test system and the UUT 2-107
Fig. 3-1 - VIVA: Program Preparation, Verification and Execution 3-51

[1] The figures reproduced in this manual may not correspond to the last version of the product. Their aim is to support the topics discussed in the manual.

ACHRONYMS

ADC *Analog to Digital Converter*: hardware component, which accepts an input analog signal and outputs a digital value.

BJT *Bipolar Junction Transistor:* category of bipolar junction transistor made up by different status of semi conductors drugged in different ways to form NPN or PNP transistors.

BNC *Bayonet Neill Concelman:* family of bayonet connectors used for coaxial wiring heading.

CPCI CompactPCI.

DAC *Digital to Analog Converter*: hardware component, which accepts an input digital signal and outputs an analog signal.

DFT Discret Fourier Transform

DDFS Direct Digital Frequency Synthesis or point-skipping at constant clock-rate or simply DDS: technique of repetitive waveform with sample scanning at a constant frequency. (Point-skipping technique).

DDS Direct Digital Synthesis.

DSP Digital Signal Processing.

DUT Device Under Test.

FGE Functional Guided Editor.

FET *Field Effect Transistor*: kind of field-effect transistors, where conduction happens through P kind or N kind channels.

FFT Fast Fourier Transform: algorithm to calculate the Discret Fourier Transform.

GPIB General Purpose Interface Bus, IEEE 488.

ICT In Circuit Test: verify of a component inserted in a circuit together with other components.

I_{IH} *High Level Input Current:* Highest input current level of a digital device, with high logic level signal. (e.g.: 40 µA).

I_{IL} *Low Level Input Current:* Highest input current level of a digital device, with low logic level signal. (e.g.: -1,6mA).

I_{OH} *High Level Output Current:* Highest output current level from a digital device, with high logic level signal. (e.g.: -0,4mA).

I_{OL} *Low Level Output Current:* Highest output current level from a digital device, with high logic level signal (e.g.: 16mA).

IEEE 488 Bus interface for external instrumentation communication.

ITA Interface Test Adapter: routing of signals from testing station channels to the nodes. (Fixture).

IMM Internal Multi Meter.

JTAG Join Test Action Group: technology developed to facilitate the SoB automatic test, become standard and classified as IEEE 1149.

LED *Light Emitting Diode:*

MIL-STD-1553 military standard, which defines the electrical characteristics and the serial bus protocol for data, flow.

MOSFET *Metal Oxide Semiconductor Field Effect Transistor*: Used mainly in the digital circuits. The conduction can happen through P kind or N kind channels.

PCI Peripheral Component Interface. (4 peripheral slots).

PLL Phase Locked Loop

PPC Point per Clock synthesis at variable clock rate or sample buffer playback synthesis: technique used to generate repetitive waveforms with sample scanning at a variable frequency. (Point-per-clock technique).

PXI PCI eXtension for instrumentation. (7 peripheral slots).

SoB	System on Board: System inserted into a board.
SoC	System on Chip: System inserted into a chip, or VLSI circuit.
UUT	Unit Under Test.
VME	Versa Module Europe; Vme bus specification managed by VSO.
VISA	Virtual Instrument Software Architecture, used to communicate with peripheral modules: serial, VXI and GPIB.
VL	VIVA Language: language used in the VIVA environment by Seica S.p.A. to build up macros executed by VIVA functions.
VLSI	Very Large Scale Integration: indicates a high-level miniaturization of an electronic component.
VNL	VIVA Native Language: language used in the VIVA environment by Seica S.p.A. to build up functions and macros executed by VIVA programs.
VXI	VME eXtension for instrumentation.
$\mathbf{V_{IH}}$	*High Level Input Voltage:* Minimum voltage level needed to consider the input signal of a digital device at high logic level. (e.g.: 2V).
$\mathbf{V_{IL}}$	*Low Level Input Voltage:* Maximum voltage level needed to consider the input signal of a digital device at low logic level. (e.g.: 0,8V).
$\mathbf{V_{OH}}$	*High Level Output Voltage:* Minimum voltage level needed to consider the output signal of a digital device at high logic level. (e.g.: 2,4V).
$\mathbf{V_{OL}}$	*Low Level Output Voltage:* Maximum voltage level needed to consider the output signal of a digital device at low logic level. (e.g.: 0,4V).

1 VIVA Macros

VIVA MACROS are sequences of a code executed in the VIVA environment for testing and soldering operations on electronic devices (components, boards, devices, etc.) using systems designed and manufactured by Seica S.p.A.

For each kind of component, it is possible to find one or more macros, according to its complexity or to the possibility of partitioning its characteristics in elementary parts. The group of macros given for a specific component form the function associated to the component.

VIVA macros can be written in "VIVA Languages", in "C Language" and "VBScipt Language.

This manual describes the **VIVA system macros**, (i.e. macros supplied by Seica S.p.A).

Using the "VIVA Languages", the user is able to develop macros for specific needs in the use of systems designed by Seica S.p.A.:

- The environment indicated in: " Programming Environment (CTRL+P)" allows to build up functions and macros created in other environments through a graphic interface.
- The environment indicated in: " Functional Programming Environment (CTRL+F)" through an editing character interface allows to build up macros in this environment's language.

To avoid ambiguity in the rest of the manual, it is good to keep in mind the following definition:

(**VNL** - VIVA Native Language), is used in the "Programming Environment" to build functions and macros used in VIVA programs.

(**VL** - VIVA Language), used in the "Functional Programming Environment" to build macros that are part of functions used in VIVA programs. Macros written in such language characterize the module label as "VL" or "VL_DYNAMIC" depending on the kind of instructions used:

VL	The macro is executed in the static mode.
VL_DYNAMIC	The macro is executed in the dynamic mode.

In the following paragraphs, a number in square brackets indicates a crossed reference to another document listed in the biography you can find at the end of this manual. For instance [1] indicates the following biographical reference:

[1] ACL Module- Internal instruments
Code:MA-ACLI00IT-02 (07-11-2006) Seica S.p.A.

1.1 Testing systems, hardware/software context and measurement methods

The following paragraphs give a brief description of the hardware/software context of VIVA macros; for details about testing instruments and their management, please refer to instructions contained in [1].

1.1.1 Hardware context

A testing system is made up by a group of testing instruments:

- to send stimuli to the components under test
- to execute measurements on the components under test
- to isolate the component under test from the context to which it's connected ("in_circuit test")
- to connect the testing instruments to logic system terminals, called **channels**
- to connect channels to physical terminals of the UUT called **nodes** or Test Points.

Instruments are available on an analog bus or made up by 8 lines. These eight lines can be connected to the system internal physical points, called channels. (See Fig. 1-5).

The UUT can be considered as a **group of nodes**. The attributes associated to each node allow to: identify the node in the space X,Y containing the UUT, its geometrical and technological characteristics, the kind of operation that can be performed on the node and other possible attributes not necessary for a testing system.

A node is normally identified by the couple <**ComponentName-PinNumber**>.

Nodes are physical points existing on the UUT, while channels are points existing on the testing system. (See Fig. 1-2).

Channels can be physical o logic according to the kind of system, which can be a bed of nails system or a flying probe system.

In order to execute tests, the channels managed by the testing program must be connected to the physical nodes corresponding to the component under test. The association between channels and nodes can be made by:

- A physical wiring (ITA or FIXTURE), on systems with interface on the RECEICER (bed of nails or connectors). A description of ITA or FIXTURE can be found in [2].
- Positioning the flying probes on Flying Probe systems. A reference to flying probes can be found in [3].

Figure Fig. 1-1 shows the abstraction layers in the VIVA environment for the management of instruments used for measurements on systems designed and produced by Seica S.p.A.

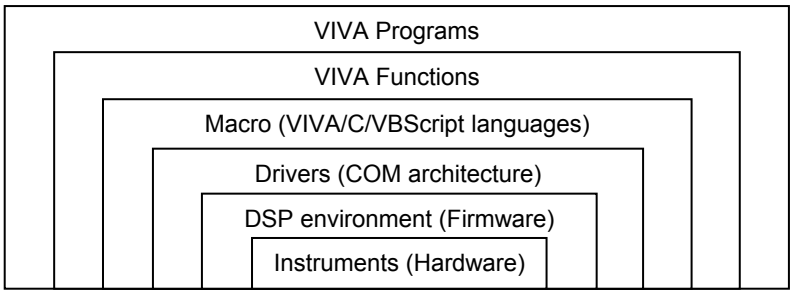

Fig. 1-1 - VIVA: Abstraction Layers

VIVA languages mean VNL, VL e VL_DYNAMIC instructions.

1.1.2 Software Context

A **Program** executed in the VIVA environment can be represented as the execution of a group of VIVA functions; each **function** is formed by one or more **macros**. To perform the testing activity, a function is associated to a specific typology of components (resistors, capacitors, inductors, diodes, relays, etc…).

The VIVA management software creates one or more macros for each component of the UUT to be tested; in the database, this is described as a testable component. The value assigned to each argument of macros is calculated according to the component characteristics described in the UUT database.
This database is created in the "Import Data" phase, while the instance of the macros used to verify the component is created in the "Create Program" phase. In the system database is possible to choose the kind of tests to be performed for a specific kind of component.

The macro identifies the procedure that manages the verify process of a component. For this management, the macro gives a list of arguments or formal parameters for the verify process. For each component that is about to be tested, actual parameters are displayed, that is values given to formal parameters during the macro execution.

The operator can modify the value of these parameters; according to his own experience in the testing environment, or to his knowledge of the instruments installed on the system, he can optimize the result obtained by the automatic sample during the "Create Program" phase.

Actually, the main parameters can be modified, while a good knowledge of topics described in [1] is recommended to comprehend and possibly modify the optional parameters.

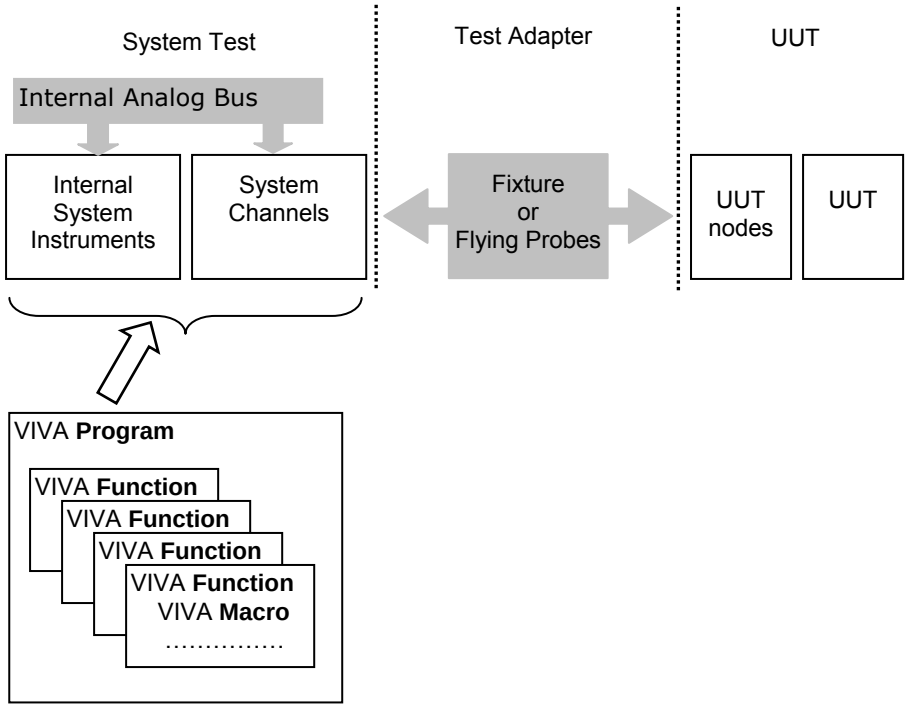

Fig. 1-2 - VIVA: System Macros and hardware/software context

1.1.3 Measurement methods

Drawings in Fig. 1-3 show the possible modes to perform measurement of Resistive, Capacitive and Inductive values using VIVA system macros.

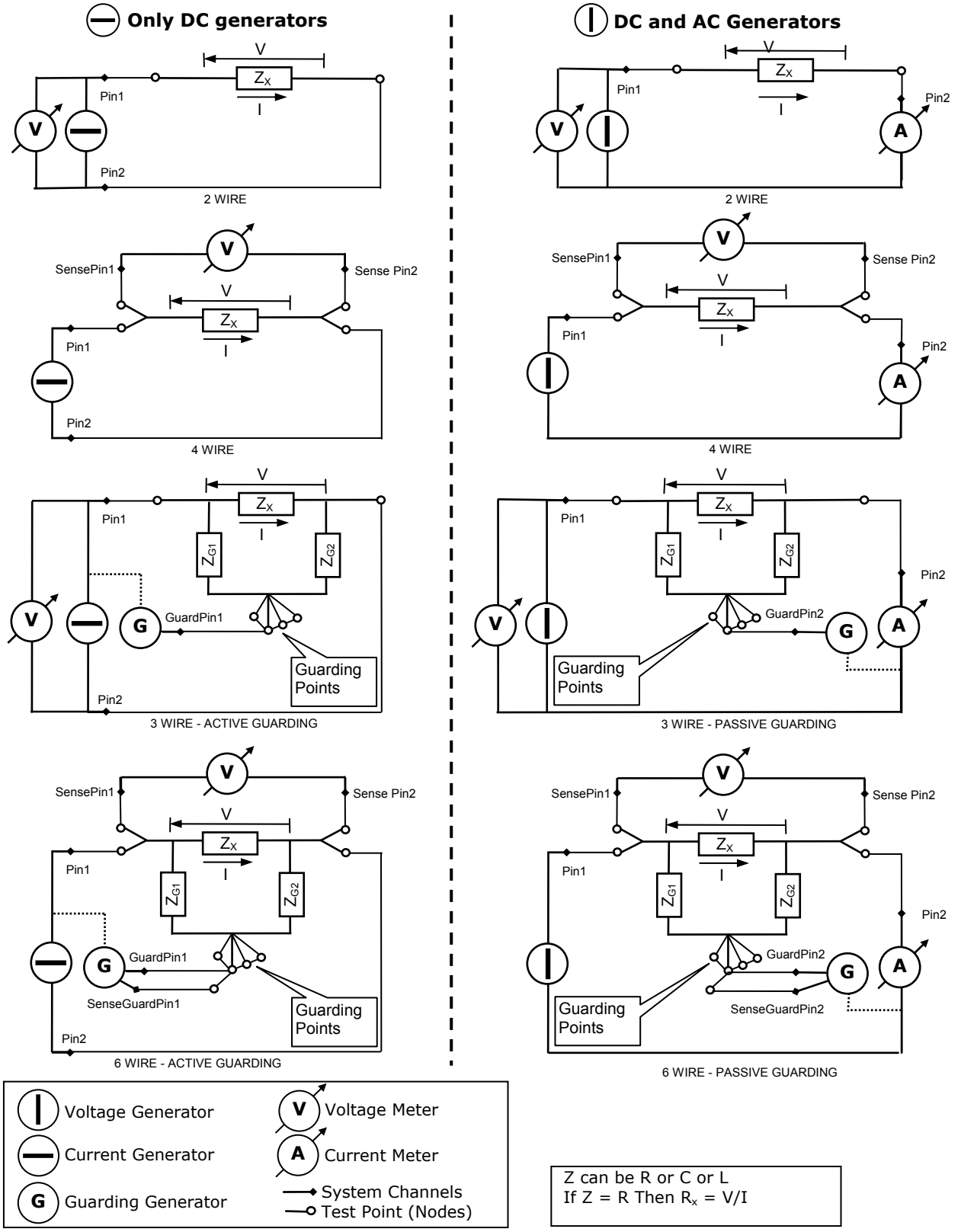

Fig. 1-3 - VIVA: modes and wires in the measure of components

1.2 Programming Environment (CTRL+P)

The **Programming Environment** is used to make new functions available or to modify the existing ones to create VIVA programs. This environment allows to:

- define the link between a kind of component and the function which identifies the macros executable on that component through the VIVA management software
- insert new functions to the ones provided with installation
- define the macros that make a specific function
- define the executing code for a specific macro of a specific function; that is: to recall the system instruments with the associated operation (or method) that the instrument can perform.

The description of programming environment is not the aim of this manual. The short notes introduced are aimed to give a general description of a VIVA program architecture and of the environment which allows to define the components of such architecture. The syntactic charts shown below give a general idea of VIVA program structure.

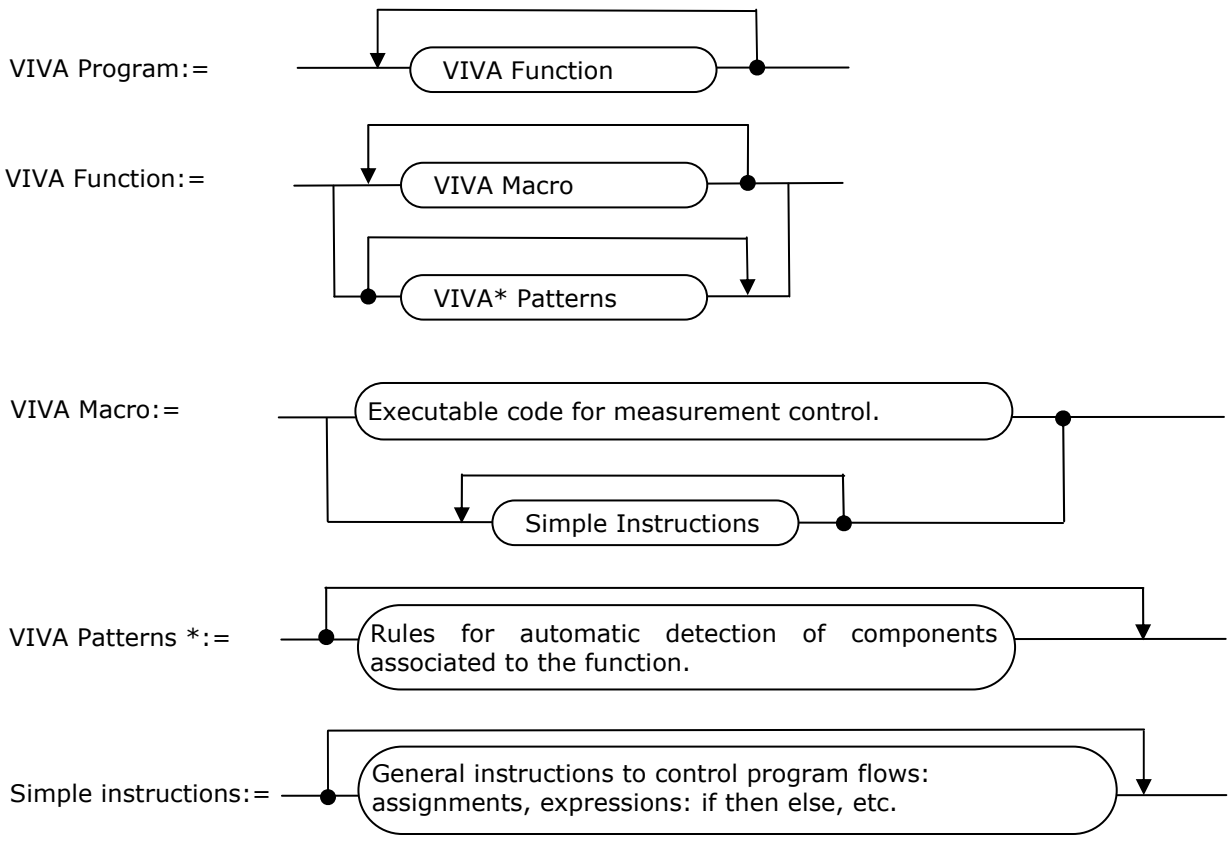

*Patterns VIVA: Are rules existing in the "Programming Environment" used in the "Create Program" phase to create the program.

After the creation, the program is like a series of sections, where a "section" means the execution of a function associated to a component.

1.3 Functional Programming Environment (CTRL+F)

The **Functional Programming Environment** is used on TESTING machines managed by the VIVA software to create function programs. These function programs, also called patterns, are formed by a cluster (the cluster is a code sequence written to verify specific UUT functions).

With a character-oriented editor, it is possible to:

- build a particular cluster,
- organize clusters in patterns file (*.pat)
- fill in the patterns file
- Etc.

The description of function program environment is not the aim of this manual. For further information, please refer to the manual described in [4] or the on-line documentation of VIVA SW.

It was quoted because some system macros have been created in this environment. We refer to macros that with the parameter "ModulType" are defined as "VL" and "VL_DYNAMIC", that is:

VL The macro in use is written in VIVA Language (VL). The macro is executed in a static mode.

VL_DYNAMIC The macro in use is written in VIVA Language Dynamic (VL_DYNAMIC). The macro is executed in a dynamic mode.

Two more values that ModulType can have are:

NONE The macro in use is written in VIVA native language[2].

VBS The macro in use is written in Visual Basic Script. (VBS).

[2] The VIVA native language is a graphic language that can be used to build VIVA macros. It is possible to use part of codes written in VL, C, VBScript languages and get directly to the software layers of the drivers.

1.4 Debug Environment (CTRL+D)

The **Debug Environment** after the testing program creation, allows to:

- define the execution mode:
- enable/disable execution on a particular section
- enable/disable execution on a particular component macro
- enable/disable execution on the specific component
- enable/disable repetition of execution (on the section, the component and the macro)
- enable/disable the graphic display of values referred to the execution on a particular node
- display the result of execution on a particular component
- display and modify the value of parameters used by the software procedure (macro) that executes the test on the particular component
- enable/disable program execution step by step
- enable/disable execution of the loop on the program
- enable/disable the printing of report after program execution
- enable/disable the use of markers for the automatic translation at the beginning of program execution (for Flying Probe systems)
- enable/disable flying probes displays during test execution (for Flying Probe systems)
- start/stop program execution

The **Debug Environment** can be used to display:

- the **sections** of a testing program (corresponding to the execution of a specific kind of function)
- the **components** tested in each section
- the **macro used** to test each component
- the values of **actual parameters of the macro**

The dialogue of the "Debug Environment" is divided in different areas:

- Above, on the left, it is possible to select the testing mode
- Immediately below, on the left, you find a grid which lists all the components (items) of a testing program (sections, components of section and macros used for every single component)
- Below, on the left, it is possible to select summarizing information about the program
- The area located above on the right, is used to display information referred to the selected item in the second area on the left (Section, Component, Macro)
- The area located below on the right allows to display graphic information about program execution or about the component referred to the selected item in the second area on the left

<u>To visualize the maximum average of information available for a VIVA macro applied to a component, you must choose the following settings:</u>

1. In the testing mode, select: "Normal Test"
2. In the grid, select the section, the component and the macro
3. In the summarizing information, select the page "Board"
4. In the graphic information, select "Schematic"
5. In the area located above on the right:
   - select "Section View" to have information about the section
   - select "Component View" to have information about the tested component
   - select "Macro View" to have information about the value of current parameters of the macro executed for the selected component
   - to view the macro optional parameters, Select "View Optional Parameters"

In the following chapters is made a reference to the display described above to describe the parameters of VIVA System macro. The figure Fig. 1-4 is a sample.

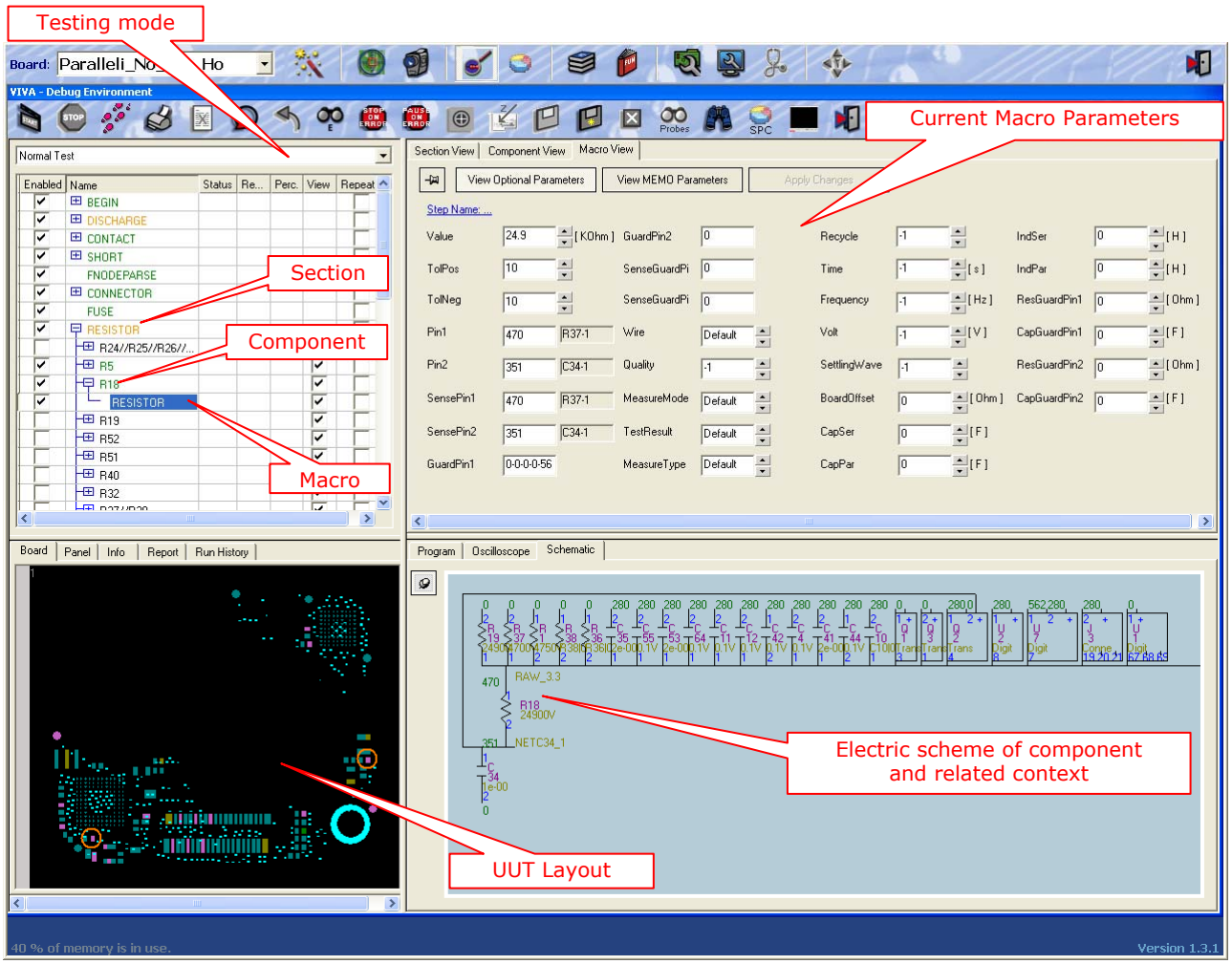

Fig. 1-4 - VIVA: Display Macro parameters in "Debug Environment"

The different color used for selected items name indicates the status of the selected item:

Green current item and all lower level items enabled

Red current item and all lower level items disabled

Orange not all lower level items are enabled

Black current item not selected

The following chapter offers a list of VIVA system macro and a description of its parameters.

It is important to remember that the parameters of a macro are divided into two categories:

Main parameters Parameters referred to the measurement that the macro must execute; these parameters normally allow to define the needs of who is developing the testing program.

Optional parameters Parameters referred to the possible measurement mode execution of the macro; to modify the current value of these parameters, a good knowledge of the system internal instruments described in [1] is required.

The figure Fig. 1-5, quoted in [1], shows the system internal instruments, their connections to the analog measurement lines and channels that are the outside interface of the testing system.

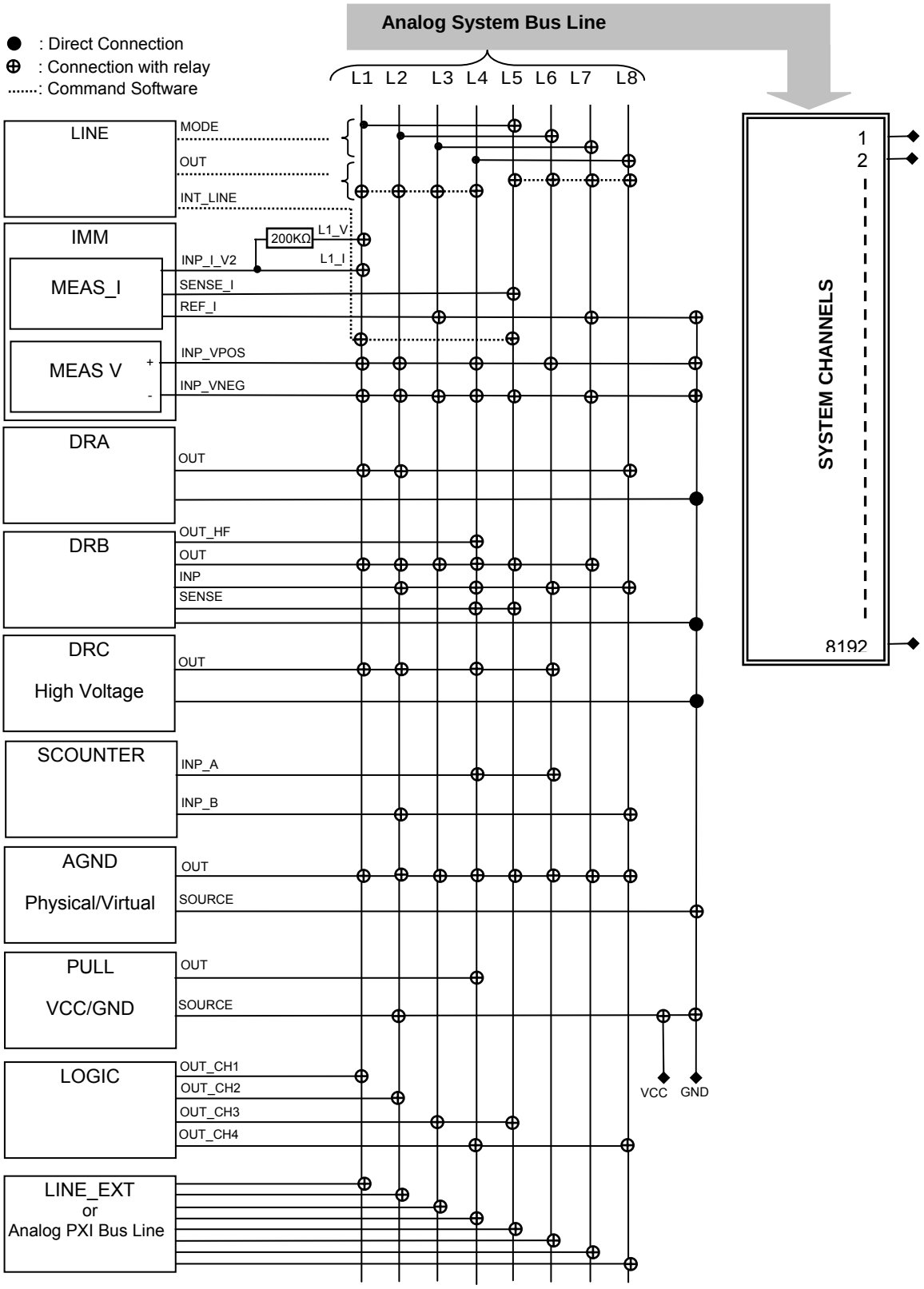

Fig. 1-5 - VIVA: Internal Instruments and System Channels

The current and the following page are taken from [1], in order to clarify the concepts of measures on "in-circuit" components and of insulation techniques of the component with "Active Guarding" and "Passive Guarding"

...
...

3.13 Compound instruments

The instruments described in the previous chapter are basic instruments used to test the UUT directly; i.e., they allow both producing the test inputs (stimuli) and measuring the corresponding outputs (replies) of the UUT.

The compound instruments described in this chapter are instruments simulated by routine firmware existing on the DSP, which controls the module. In the testing program, these instruments are used as normal measurement instruments while their execution consists in the use of generators and elementary measurers of the ACL module, connected in a proper way, and in the execution of possible elaborations to give measure values. These simulated instruments simplify the programmer's job in generation and measurement instruments management, connecting through the instruments matrix and the channel boards with the UUT. Besides, they convert measurements executed in resistive, capacitive, inductive, continuity indicators or open circuit indicators, executing the required calculations much faster than the instructions executed in the memory by the Main PC.

With the firmware existing on the ACL module, the following complex measurements are available.

- Resistance measurement **~MEAS RES**
- Capacitance measurement **~MEAS CAP**
- Inductance measurement **~MEAS IND**
- Junction measurement **~MEAS JUN**
- Short-circuit measurement **~MEAS SHORT**
- Contact measurement **~MEAS CONTACT**

The measurements performed with these instruments differ from those of current and voltage because a scale must be measured: resistance, capacitance, inductance, etc. which is a physical property of the component to be measured. To measure the value of this scale, the component must be electrically activated by applying an external electromotive force source that allows current circulation or by injecting a current circulation that detects voltage drops on the component.

Since these measurements are executed "in-circuit", that is with the component to be measured placed in a circuit consisting of other components, insulation techniques must be adopted in order to prevent the other components form altering measurement. The insulation technique adopted in this kind of measurements is called "guarding" and it can be active or passive according to the kind of generator applied to the component:

Active Guarding: A current is injected in Z_X and the voltage is measured at its pins. Fig. 3-20 indicates that this insulation technique consists in bringing the guarding points to the same potential of the current generator, so that the current circulating in Z_{G1} is null and the whole current supplied by the generator circulates in Z_X.

Passive Guarding: the generator used is a voltage generator and the measurement performed is a current measurement. Fig. 3-20 indicates that this insulation technique consists in bringing the guarding points to the same potential as the current generator return pole. Since the current meter has null internal resistance, the two Z_{G2} poles will have the same potential; the current circulating in Z_{G2} is null and the whole current circulating in Z_X is the current measured by the current meter.

In Fig. 3-20:

Z_X Represents the component to be measured.

Z_{G1} Represents all the surrounding components that, if not insulated, may absorb part of the current supplied by the generator.

Z_{G2} Represents all the surrounding components that, if not insulated, may cause current circulation so that the current value measured by the meter differs from the value of the current circulating in Z_X.

CHN3 Identifies the sensing point of CHN1 point to which is connected a pole of the component to be measured. In the figure reproduced on the left, it is connected to the voltage meter.

CHN4 Identifies the sensing point of CHN2 to which is connected the other pole of the component to be measured. In the figure reproduced on the left, it is connected to the other pole of the voltage meter.

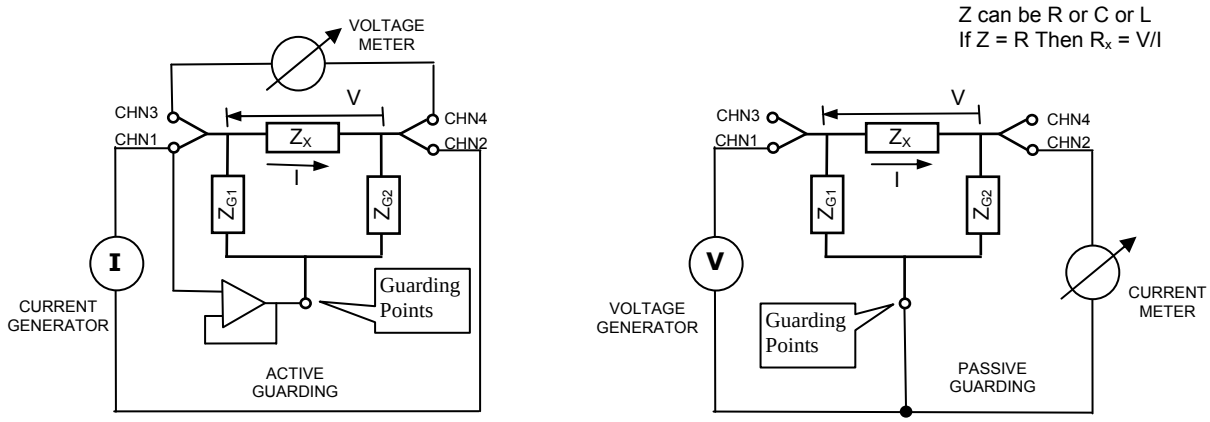

Fig 3-20 - ACL module: Component measurement and guarding

Fig. 1-6 - VIVA: Component measurement and guarding

According to the kind of guarding set for measurement, the kind of generator and meter used are selected automatically, as well as the setting instruments involved in the measurement.

Instructions for resistive, capacitive, inductive, short-circuits, insulation, diode junctions and transistors measurement are described below. The component to be measured, the components to be insulated, generators and meters involved for all kind of measurements are shown in Fig. 3-20, while the instructions allow to define typical aspects for every single measurement.

...
...

2 List of VIVA Macros and parameters descriptions

The following paragraphs provide a description of VIVA system macros. For each macro there is a reference to the corresponding parameters putting in evidence the two belonging category: main parameters and optional parameters. For each parameter are indicated the possible values, the measure unit, the default value (when relevant) and a brief description.

The dialogue of the "Debug Environment" allows to view the current parameters values of macros used by a diagnose program. The value of actual parameters for a system macro depends on the parameters of the component to be tested, located in the "Board CAD data base", and on the parameters of the macro in use, located in the "Function & Macro data base". (See Fig. 1-1).

It is important to remember that VIVA macros execute checks on components and not only simple measurements with internal instruments as described in [1]. For example, the macro "RESISTOR", used to check that a resistive value is included in the specified tolerance limits:

- accepts the three input values: nominal, positive tolerance and negative tolerance
- executes the basic command, described in [1], to set the possible channels used for the guards
- executes the basic command, described in [1], to measure the resistive value on the channels corresponding to the two nodes identifying, on the UUT, the pins of the component to be tested
- verifies that the measure value is valid and ends the execution

The ending of a VIVA macro gives, as a result:

- PASS or FAIL information according to measurements performed on the component
- The value of the measurement executed, when relevant

The resulting values will be handled by VIVA software to manage a program execution flow and to send report or error messages.

In the "Debug Environment", when available, the couple <component, pin> is associated to the channel numbers, to identify the physical point on the UUT connected to the channel. (i.e. to identify the node on the UUT).

In the parameter description, channel numbers range is indicated with [0-N] where:

- N has value 8.192 for systems with interface on receiver where channels are physical
- N is not limited on Flying Probes systems where channels are logic

2.1 Parameters with common meaning to several system macros

Some parameters, referred to the testing mode execution, are found on quite all the system macros. Even though the parameter has a specific value for each macro, its meaning is always the same. For this reason the description of these parameters is contained in this chapter. For the macros that use these parameters, refer to this chapter.

MeasureType: [Normal|Average|RecOnError|Maximum|Minimum|Peak ToPeak]
This parameter defines the kind of elaborations that the macro will perform on the executed measurements. This parameter depends on another parameter: "Recycle" and can have one of the following values:

Normal	The macro is executed and the result is provided in output. "Normal" is the default value of the parameter.
Average	Measurement is executed the number of times defined with "Recycle" parameter and the result is the arithmetic average of all executed measurements.
RecOnError	Measurement is executed until the measured value is included between the limits defined with: "Value", "TolPos" and "TolNeg" parameter, or reaches the "Recycle" value.
Maximum	When the macro finishes the output result is the maximum value of all measured values. The number of measurements executed depends on the value of "Recycle" parameter.
Minimum	When the macro finishes the output result is the minimum value of all measured values. The number of measurements executed depends on the value of "Recycle" parameter.
Peak ToPeak	When the macro finishes the output result corresponds to the difference between the maximum and the minimum of all measured values. The number of measurements executed depends on the value of "Recycle" parameter.

Quality: [0-100%]
This parameter indicates measurement quality degree. It is expressed with a whole number; value range from 0 to 100. The result of a measure is obtained as the arithmetic average on the number of sample measurements executed. Increasing the value of this parameter, the number of sample measurements increases too improving the measurement quality. Of course, this implies that much more time is needed to perform the measurement.

Recycle: [0-1.000.000]
Indicates how many times measurement is executed. The value of "Recycle" parameter influences the kind of elaborations defined with "MeasureType" parameter. "Recycle" can have values included in the interval: 0-1.000.000. The default value for this parameter is 1.

TestResult: [Test Result|Force Pass|Force Fail|Force Skip]
This parameter determines the kind of result you can obtain by executing the macro. It can have one of the following values:

Test Result	Macro execution will provide the "Pass" or "Fail" output value depending on the measured value and on the expected values, defined with: "Value", "TolPos" and "TolNeg" parameters.
Force_Pass	Macro execution will always give the "Pass" value output.
Force_Fail	Macro execution will always give the "Fail" value output
Force_Skip	The macro is not executed and no result is given as output

Wire: [Auto|2 WIRE|3 WIRE|4 WIRE|6 WIRE]

This parameter indicates the number of wires (or channels) used for measurement. It can have one of the following values:

Auto	*The number of wires used is not defined. The VIVA software will determine the most suitable number of wires needed during the execution of the measurement.*
2 WIRE	*A 2-wire measurement is executed: the meter is connected to the same channels used by the generator.*
3 WIRE	*A 3-wire measurement is executed: the measurement is the same as the 2-wires; a third wire is used for the guarding.*
4 WIRE	*A 4-wire measurement is executed: the meter is connected to resistance to be measured through 2 different channels than those used by the generator. (Kelvin Measurement)*
6 WIRE	*A 6-wire measurement is executed: The measurement is the same as the four-wire with a fifth wire used for the guarding and the sixth used for the guarding sensing.*

2.2 RESISTOR

The RESISTOR macro is used to perform value measurements of electric resistance on the UUT. To execute measurements, the main parameters are referred to the expected value, to tolerances on the expected value and to internal system points (channels) on which the component pins under test are connected. Optional parameters are referred to measurement modes.

Below you will find a brief description of the macro parameters, regarding first to main and then to optional parameters.

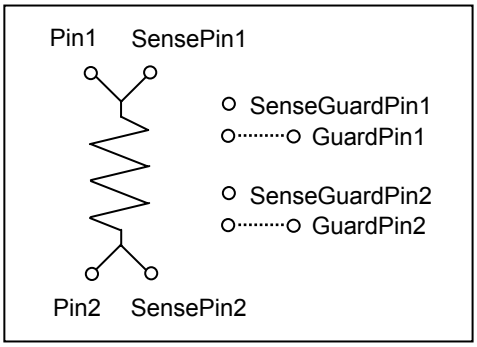

RESISTOR **(Value, TolPos, TolNeg, Pin1, Pin2, SensePin1, SensePin2, GuardPin1, GuardPin2, SenseGuardPin1, SenseGuardPin2, Wire, Quality, MeasureMode, TestResult, MeasureType, Recycle, Time, Frequency, Volt, SettlingWave, BoardOffset, CapSer, CapPar, IndSer, IndPar, ResGuardPin1, CapGuardPin1, ResGuardPin2, CapGuardPin2,)**

Main parameters

Value: [0 -100.000.000 Ohm]
This parameter indicates the expected resistive value of the resistance to be measured; it is expressed in Ω, value range: 0-100.000.000. The generator and the meter used are set according to the expected value indicated with the parameter "Value".

TolPos: [0-100%]
This parameter indicates the maximum positive tolerance accepted in the measurement of the component. This parameter is expressed as a percentage (%) with possible values included in the interval: 0-100.

TolNeg: [0-100%]
This parameter indicates the maximum negative tolerance accepted in the measurement of the component. This parameter is expressed in percent (%) and can go from 0-100.

Pin1: [0-N]
This parameter indicates the channel connected to the positive terminal of the component to be measured, (positive is the pole connected to the generator that stimulates the component by injecting current or by applying tension. This parameter is expressed as a whole number with possible values included in the interval 0-N. If "Pin1 parameter is 0, the macro is not executed.

Pin2: [0-N]
This parameter indicates the channel connected to the negative terminal of the component to be measured, (negative is the opposite terminal to the positive one of the component to be measured. This parameter is expressed as a whole number with possible values included in the interval 0-N. If "Pin2 parameter is 0, the macro is not executed.

Optional parameters

SensePin1: [0-N]
This parameter indicates the channel connected to the positive terminal of the voltage meter, which, for measurements with 4 or 6 wires is connected to the resistance positive pole that is to be measured. For measurements with 2 and 3 wires the voltage meter is connected internally to the generator that stimulates the component to be measured. The parameter is expressed as a whole number with possible values included in the interval 0-N. If "SensePin1" is 0, no channel is used.

SensePin2: [0-N]
This parameter indicates the channel connected to the negative terminal of voltage meter, which, for measurements with 4 or 6 wires is connected to the resistance negative pole that is to be measured. For measurements with 2 and 3 wires, the voltage meter is connected internally to the generator that stimulates the component to be measured. The parameter is expressed as a whole number with possible values included in the interval 0-N. If "SensePin2" is 0, no channel is used.

GuardPin1: [List of numbers included between 0-N]
This parameter indicates the channels connected to points on the UUT, which, thanks to the "Guarding Generator" and the "Active Guarding" technique, insulates the component under test to perform the measurement.
This parameter is relevant only if the "Active Guarding" technique is used for insulation (setting "MeasureMode" and "Wire" parameters). ("Measure MODE" = "DC_ACTIVE" & "Wire" = "3Wire" | "6Wire"). The possible values of the parameter can go from 0 to N; If "GuardPin1" is 0, no channel is used.

GuardPin2: [List of numbers included between 0-N]
This parameter indicates the channels connected to points on the UUT, which, thanks to the "Guarding Generator" and the "Passive Guarding" technique, insulates the component under test to perform the measurement.
This parameter is relevant only if the "Passive Guarding" technique is used for insulation (setting "MeasureMode" and "Wire" parameters). ("Measure MODE" = "DC_ACTIVE" & "Wire" = "3Wire" | "6Wire"). The possible values of the parameter can go from 0 to N; if "GuardPin2" is 0, no channel is used.

SenseGuardPin1: [0-N]
This parameter indicates the channel connected to "Guarding Generator" sensing, i.e. the point that gives reference level to the "Guarding Generator".
*The parameter is relevant only for six-wires measurements with "Active Guarding" insulation technique. It can have values included between 0 and N. If "SenseGuardPin1" is 0, the "Guarding Generator" sensing è is taken from the generator that injects the current needed to execute measurement. For further details, please refer to Fig. 3-2 and Fig.3.20 of [1] (*Fig. 1-6 *of this manual).*

SenseGuardPin2: [0-N]
This parameter indicates the channel connected to "Guarding Generator" sensing, i.e. the point that gives reference level to the "Guarding Generator".
*The parameter is relevant only for six-wires measurements with "Passive Guarding" insulation technique. It can have values included between 0 and N. If "SenseGuardPin2" is 0, the "Guarding Generator" sensing is taken from the negative pole of the current meter used to measure the current circulating in the measured component. For further details, please refer to Fig. 3-20 of [1] (*Fig. 1-6 *of this manual).*

Wire: [Auto|2 WIRE|3 WIRE|4 WIRE|6 WIRE]
This parameter indicates the number of wires (or channels) used for measurement.
For further information, see: ***Wire*** *in chapter 2.1 "Parameters with common meaning to several system macros".*

Quality: [0-100%]
This parameter indicates measurement quality degree. For further information, see: ***Quality*** *in chapter 2.1 "Parameters with common meaning to several system macros".*

MeasureMode: [DC_ACTIVE|DC_PASSIVE|AC_PASSIVE]
This parameter indicates the measure mode, i.e. the kind of generator and the kind of guarding used. It can have one of the following values:

Auto *The measure mode is not set. During program execution, the VIVA software determines the most suitable measure mode.*

DC_ACTIVE *Measure is executed with a DC current generator. If the parameter indicating the number of lines used for measurement is set to 3 or 6 wires, the active guarding is applied.*

DC_PASSIVE *Measurement is executed with a DC voltage generator and, if the parameter indicating the number of lines used for measurement is set to 3 or 6 wires, the passive guarding is applied.*

AC_PASSIVE *Measurement is executes with an AC voltage generator and, if the parameter indicating the number of lines used for measurement is set to 3 or 6 wires, the passive guarding is applied.*

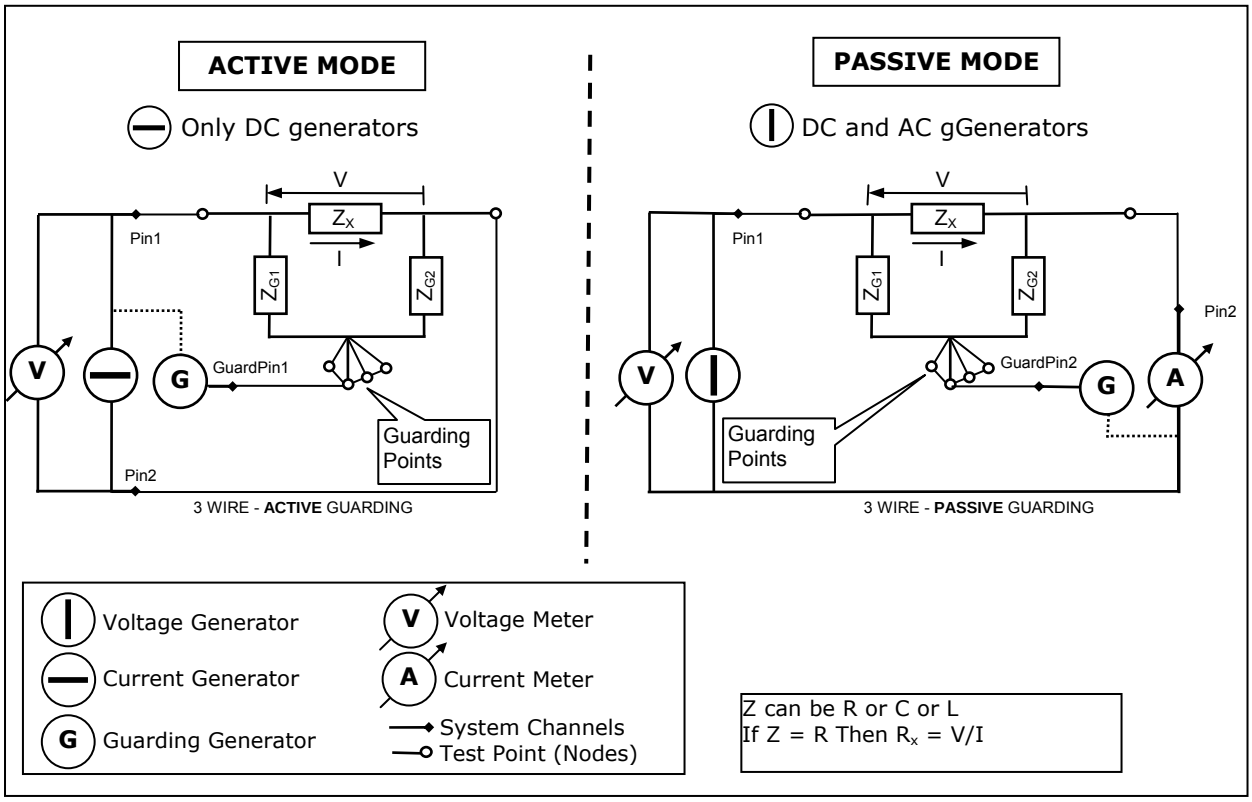

TestResult: [Test Result|Force Pass|Force Fail|Force Skip]
This parameter determines the kind of result you can obtain by executing the macro. For further information, see: ***TestResult*** *in chapter 2.1 "Parameters with common meaning to several system macros".*

MeasureType: [Normal|Average|RecOnError|Maximum|Minimum|Peak ToPeak]
This parameter defines the kind of elaborations that the macro will perform on the executed measurements. For further information, see: ***MeasureType*** *in chapter 2.1 "Parameters with common meaning to several system macros".*

Recycle: [0-1.000.000]
Indicates how many times a measurement must be executed. For further information, see: ***Recycle*** *in chapter 2.1 "Parameters with common meaning to several system macros".*

Time: [0-1 sec]
This parameter indicates the measurement lasting; it is relevant if we use a DC generator, that is, "MeasureMode" is set to DC_ACTIVE o DC_PASSIVE. The possible values of this parameter are included between 0-1 (expressed in seconds). If the value is 0, this means that measurement lasting is not defined at macro level, but at a lower level. ("Drivers" and "DSP environment" for internal instrument management). See Fig. 1-1.

Frequency: [0-100.000 Hz]
This parameter indicates the generator frequency used for measurement; this parameter is relevant if we use an AC generator, that is, "MeasureMode" is set to AC_PASSIVE. Parameter value range: 0-100.000, in Hertz. If the value is 0, the frequency of generator in use for measurement is not defined at macro level but at the lower level. ("Drivers" and "DSP environment" for internal instrument management). See Fig. 1-1.

Volt: [0 -100 Volt]
This parameter indicates the voltage value used for measurement of resistance. If the generator in use is a voltage generator, this value indicates the generator programming value. Parameter value range: 0-100 volts.

SettlingWave: [0-100]
This parameter allows to change the delay time before sample measurement acquisition begins. It is expressed as a whole number (value range: 0-100). A delay time is normally required when stimuli are applied to the component to be measured, before measurements begin, to exit the initial temporary regimes due to the existence of inductances in the module containing measurement instruments and in the UUT. Increasing the "SettlingWave" value, the delay time increases too and accuracy of measurement is improved: of course the time needed to execute the measurement increases too.

BoardOffset: [-100.000.000-100.000.000 Ohm]
The parameter defines the difference between the measured value and the nominal value of the component to be measured. This parameter is needed for "in-circuit" measurement of a component that can not be properly insulated through surveillance techniques called: "Active Guarding" or "Passive Guarding". The value of this parameter is different for each component and is valid only with the execution of the specific macro instance.

CapSer: [0-1 Farad]
This parameter indicates the capacitive in series value to the resistance to be measured; it is expressed in Farad and can have values between: 0 -1. The value is set by VIVA software when creating the program or when executing the program in "Autodebug" or "Autolearn" mode. This parameter can be set manually in the Debug Environment.

CapPar: [0-1 Farad]
This parameter indicates the capacitive parallel value to the resistance under measurement. Parameter value range: 0-1 Farad. The VIVA software sets this value when creating the program or when executing the program in "Autodebug" or "Autolearn" mode. This parameter can be set manually in the Debug Environment.

IndSer: [0-100 Henry]
This parameter indicates the inductive value in series to the resistance under measurement. It is expressed in Henry, with value range from 0 to 100. The value is set by VIVA software when creating the program or when executing the program in "Autodebug" or "Autolearn" mode. This parameter can be set manually in the Debug Environment.

IndPar: [0-100 Henry]
This parameter indicates the inductive parallel value to the resistance under measurement. It is expressed in Henry, with value range from 0 to 100. The value is set by VIVA software when creating the program or when executing the program in "Autodebug" or "Autolearn" mode. This parameter can be set manually in the Debug Environment.

ResGuardPin1: [0-100.000.000 Ohm]
This parameter indicates the expected resistive value of the surrounding components (Z_{G1} in Fig. 1-6*) that, if not insulated, can absorb part of the current supplied by the generator. It is expressed in Ohm, with possible values going from 0 to 100.000.000. If the value is 0, this means: inactive parameter.*

CapGuardPin1: [0-1 Farad]
This parameter indicates the expected capacitive value of the surrounding components (Z_{G1} in Fig. 1-6) that, if not insulated, can absorb part of the current supplied by the generator. It is expressed in Farad, with possible values included between 0 and 1. If the value is 0, this means: inactive parameter.

ResGuardPin2: [0-100.000.000 Ohm]
This parameter indicates the expected resistive value of the surrounding components (Z_{G2} in Fig. 1-6*) that, if not insulated, can have a current circulation so that the value of current detected by the meter differs from the value of current circulating in Z_X. It is expressed in Ohm, with possible values going from 0 to 100.000.000. If the value is 0, this means: inactive parameter.*

CapGuardPin2: [0-1 Farad]
This parameter indicates the expected capacitive value of the surrounding components (Z_{G2} of Fig. 1-6*) that, if not insulated, can have a current circulation so that the value of current detected by the meter differs from the value of current circulating in Z_X. It is expressed in Farad, with possible values included between 0 and 1. If the value is 0, this means: inactive parameter.*

2.3 CAPACITOR

The CAPACITOR macro is used to measure capacitive values on the UUT. To execute measurements, the main parameters are referred to the expected value, to tolerances on expected value and to internal system points (channels) where component pins under test are connected. Optional parameters are referred to measurement mode execution.

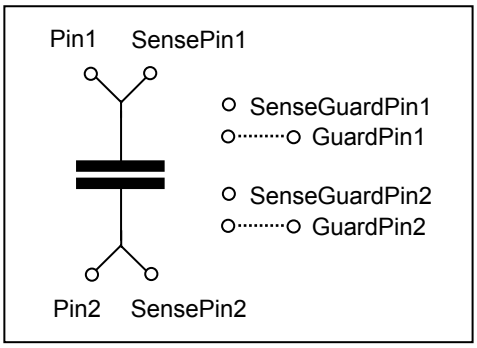

Below, we provide a brief description of the macro parameter, describing first the main and then the optional parameters.

Main Parameters

Value: [0 -1 Farad]
This parameter indicates the expected capacitive value to be measured. It is expressed in Farad, with possible values included between 0 and 1. The generator and meter used for measurement are set according to the expected value indicated in "Value" parameter.

TolPos: [0-100%]
This parameter indicates the maximum positive tolerance accepted in the component measurement. It is expressed in percent (%)with possible values going from 0 to100.

TolNeg: [0-100%]
This parameter indicates the maximum negative tolerance accepted in the component measurement. It is expressed in percent (%)with possible values going from 0 to100.

Pin1: [0-N]
This parameter indicates the channel connected to the positive terminal of the component under measurement, where positive is the pole connected to the generator that stimulates the component by injecting current or by applying voltage. This parameter is expressed as a whole number, with possible values included between 0 and N. If "Pin1" is 0, the macro is not executed.

Pin2: [0-N]
This parameter indicates the channel connected to the negative terminal of the component under measurement, where negative is the terminal opposite to positive terminal of the component under measurement. The parameter is expressed as a whole number, with possible values included between 0 and N. If "Pin2" is 0, the macro is not executed

Optional parameters

SensePin1: [0-N]
This parameter indicates the channel connected to positive terminal of the voltage meter, which is connected to the positive pole of the component for 4 or 6 wires measurements. For the 2 and 3 wires measurements the voltage meter is connected internally to the generator which stimulates the component under measurement. This parameter is expressed as a whole number, with possible values included between 0 and N. If "SensePin1" is 0, no channel is used.

SensePin2: [0-N]
This parameter indicates the channel connected to negative terminal of the voltage meter, which is connected to the negative pole of the component for 4 or 6 wire measurements. For the 2 and 3 wire measurement, the voltage meter is connected internally to the generator which stimulates the component under measurement. This parameter is expressed as a whole number, with possible values included between 0 and N. If "SensePin2" is 0, no channel is used.

GuardPin1: ***[List of numbers included in the interval: 0-N]***
This parameter indicates the channels connected to the UUT points: thanks to the "Guarding Generator" and the "Active Guarding" technique, it is possible to insulate the component under test to perform the measurement.
This parameter is relevant only if the parameters "MeasureMode" and "Wire" indicate that the insulating technique in use is the "Active Guarding". ("Measure MODE" = "DC_ACTIVE" & "Wire" = "3Wire" | "6Wire"). Numbers listed in the parameter, may have values included between 0 and N. If "GuardPin1" is 0, no channel is used.

GuardPin2: ***[List of numbers, included in the interval: 0-N]***
This parameter indicates the channels connected to the UUT points: thanks to the "Guarding Generator" and the "Passive Guarding" technique, it is possible to insulate the component under test to perform the measurement.
This parameter is relevant only if the parameters "MeasureMode" and "Wire" indicate that the insulating technique used is "Passive Guarding". ("Measure MODE" = "DC_PASSIVE" | "AC_PASSIVE" & "Wire" = "3Wire" | "6Wire"). Numbers listed in the parameter, may have values included between 0 and N. If "GuardPin2" is 0, no channel is used.

SenseGuardPin1: ***[0-N]***
This parameter indicates the channel connected to the "Guarding Generator" sensing, i.e. the point that gives the reference level to the "Guarding Generator".
*This parameter is relevant only for 6 wire measurements with "Active Guarding" insulation technique. The possible values of this parameter are included in the interval: 0-N. If "SenseGuardPin1" is 0, the del "Guarding Generator" sensing is taken from the generator that injects the required current for measurement. For further details, please refer to: Fig. 3-2 and Fig.3.20 in [1] (*Fig. 1-6 *of this manual).*

SenseGuardPin2: ***[0-N]***
This parameter indicates the channel connected to the "Guarding Generator" sensing, i.e. the point that gives the reference level to the "Guarding Generator".
*This parameter is relevant only with 6 wires measurements with "Passive Guarding" insulation technique. The possible values of this parameter are included in the interval: 0-N. If "SenseGuardPin2" is 0, the "Guarding Generator" sensing is taken from the negative pole of the current meter in use to measure the current circulating in the measured component. For further details, please refer to Fig. 3-20 in [1] (*Fig. 1-6 *of this manual).*

Wire: ***[Auto|2 WIRE|3 WIRE|4 WIRE|6 WIRE]***
This parameter indicates the number of wires (or channels) used for measurement.
For further information, see: ***Wire*** *in chapter 2.1 "Parameters with common meaning to several system macros".*

Quality: ***[0-100%]***
This parameter indicates measurement quality degree. For further information, see: ***Quality*** *in chapter 2.1 "Parameters with common meaning to several system macros".*

MeasureMode: [DC_ACTIVE|DC_PASSIVE|AC_PASSIVE]
This parameter indicates measurement mode, i.e. the kind of generator and guarding used. It can have one of the following values:

Auto *No measure mode is defined. During the program execution the VIVA software will determine the most suitable measure unit.*

DC_ACTIVE *Measurement is executed with a DC current generator and, if the parameter defining the number of lines in use for measurement is set to 3 or 6 wires, the active guarding is applied.*

AC_PASSIVE *Measurement is executed with an AC voltage generator and, if the parameter defining the number of lines in use for measurement is set to 3 or 6 wires, the passive guarding is applied.*

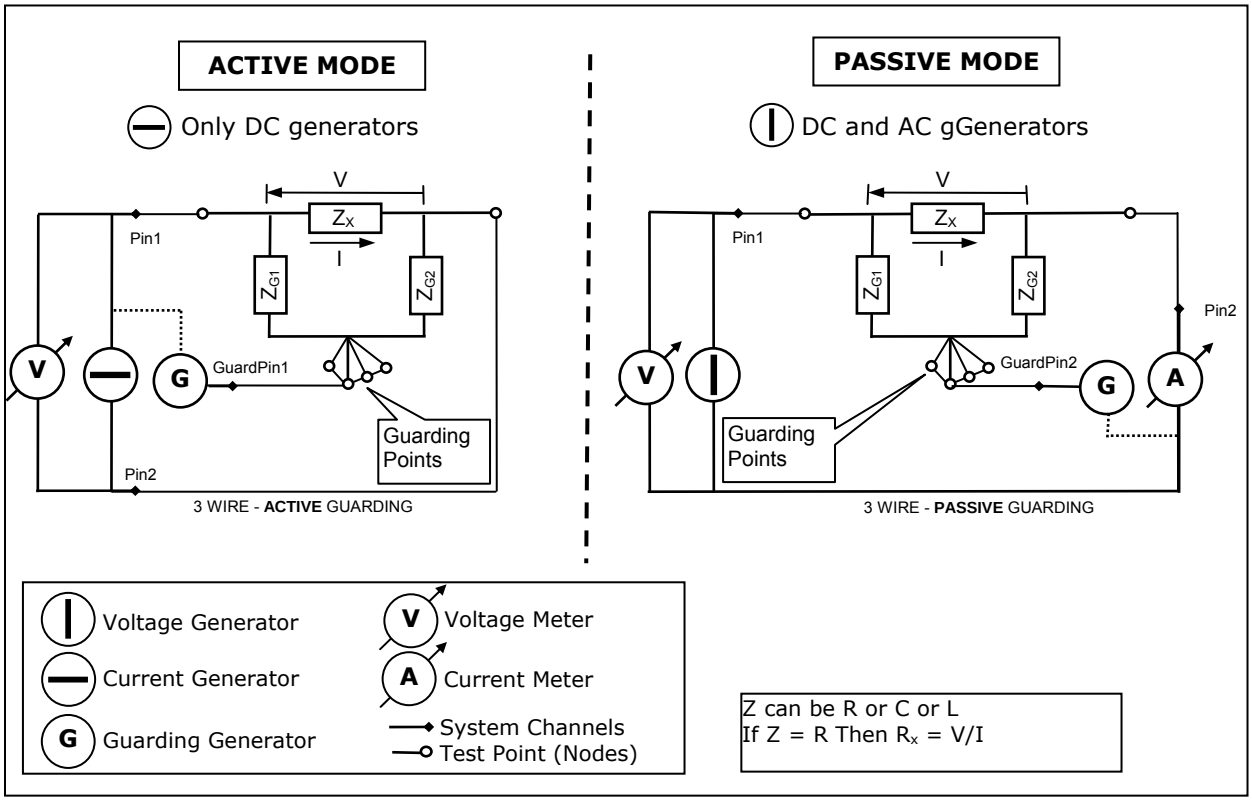

TestResult: [Test Result|Force Pass|Force Fail|Force Skip]
This parameter determines the kind of result you can obtain by executing the macro. For further information, see: ***TestResult*** *in chapter 2.1 "Parameters with common meaning to several system macros".*

MeasureType: [Normal|Average|RecOnError|Maximum|Minimum|Peak ToPeak]
This parameter defines the kind of elaborations that the macro will perform on the executed measurements. For further information, see: ***MeasureType*** *in chapter 2.1 "Parameters with common meaning to several system macros".*

Recycle: [0-1.000.000]
Indicates the number of times that a measurement must be executed. For further information, see: ***Recycle*** *in chapter 2.1 "Parameters with common meaning to several system macros".*

Time: [0-1 sec]
Indicates measurement lasting. This parameter is relevant if the generator in use is a DC generator, i.e. if the parameter "MeasureMode" is set to DC_ACTIVE or DC_PASSIVE. It can have values between 0 and 1 and is expressed in seconds. If the value for "Time" is 0, this means that measurement lasting is not defined at a macro level but at a lower level. ("Drivers" and "DSP environment" for internal instruments management). See Fig. 1-1.

Frequency: [0-100.000 Hz]
Indicates the frequency of the generator in use for measurement. This parameter is relevant if the generator in use is an AC generator, i.e. if the parameter "MeasureMode" is set to AC_PASSIVE. It can have values included in the interval: 0-100.000 and is expressed in Hertz If the value for "Frequency" is 0, this means that the generator frequency is not defined at a macro level, but at a lower level. ("Drivers" and "DSP environment" for internal instruments management). See Fig. 1-1.

Volt: [0 -100 Volt]
This parameter indicates the voltage value used to measure resistance. If the generator in use is a voltage generator, this value corresponds to the programming value of the generator. This parameter can have values included in the interval 0-100 and is expressed in Volt. The default value for "Volt" is 0.3.

SettlingWave: [0-100]
This parameter allows to modify the delay time before sample measurement acquisition. It is expressed as a whole number and can have values included in the interval: 0-100. Normally, a delay time is needed before measurement begins, after stimulating the component, to exit the initial transitory regimes due to the existing inductances both in the module containing measurement instruments and in the UUT. Increasing the "SettlingWave" value, the delay time increases too and the accuracy of measurement is improved. Of course the time needed to perform the measurement increases as well.

BoardOffset: [-1-+1 Farad]
The parameter defines the difference between the measured value and the nominal value of the component to be measured. This parameter is needed for "in-circuit" measurement of a component that can not be properly insulated through surveillance techniques called: "Active Guarding" or "Passive Guarding". The value of this parameter is different for each component and is valid only with the execution of the specific macro instance.

ResSer: [0-100.000.000 Ohm]
This parameter indicates the resistive in series value to the capacitance to be measured. It is expressed in Ohm, with possible values included in the interval: 0 -100.000.000. The VIVA software sets the value of this parameter when creating the program or when executing in "Autodebug" or "Autolearn" mode. It can be manually modified from the Debug Environment.

ResPar: [0-100.000.000 Ohm]
This parameter indicates the resistive in parallel value to the capacitance to be measured. It is expressed in Ohm, with possible values included in the interval: 0-100.000.000. The VIVA software sets the value of this parameter when creating the program or when executing in "Autodebug" or "Autolearn" mode. It can be manually modified from the Debug Environment.

ResGuardPin1: [0-100.000.000 Ohm]
This parameter indicates the expected resistive value of the surrounding components (Z_{G1} in Fig. 1-6*) that, if not insulated, may absorb part of the current supplied by the generator. It is expressed in Ohm, with possible values included in the interval: 0-100.000.000. If the value is 0, this means: inactive parameter.*

CapGuardPin1: [0-1 Farad]
This parameter indicates the expected capacitance value of the surrounding components (Z_{G1} in Fig. 1-6) that, if not insulated, may absorb part of the current supplied by the generator. It is expressed in Farad, with possible values included in the interval: 0-1. If the value is 0, this means: inactive parameter.

ResGuardPin2: [0-100.000.000 Ohm]
This parameter indicates the expected resistive value of the surrounding components (Z_{G2} in Fig. 1-6*) that, if not insulated, may have a current circulation so that the value of the current detected by the meter differs from the value of the current circulating in Z_X. It is expressed in Ohm, with possible values included in the interval: 0-100.000.000. If the value is 0, this means: inactive parameter.*

CapGuardPin2: [0-1 Farad]
This parameter indicates the expected capacitance value of the surrounding components (Z_{G2} in Fig. 1-6*) that, if not insulated, may have a current circulation so that the value of the current detected by the meter differs from the value of the current circulating in Z_X. It is expressed in Farad, with possible values included in the interval: 0-1. If the value is 0, this means: inactive parameter.*

2.4 INDUCTOR

The INDUCTOR macro is used to measure electric inductance values on the UUT. To execute measurements, the main parameters are referred to the expected value, to tolerances on this expected value and to the internal points of the system (channels) where the pins of the component under test are connected. Optional parameters refer to measurement modes.

Below you will find a brief description of the macro parameters, regarding first to main and then to optional parameters.

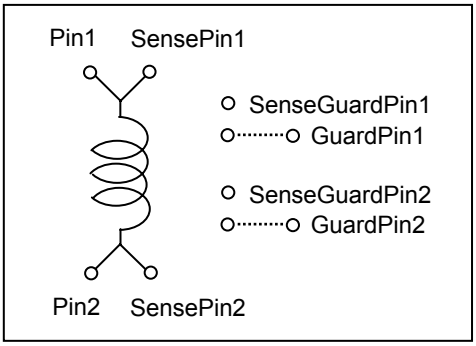

INDUCTOR (Value, TolPos, TolNeg, Pin1, Pin2, SensePin1, SensePin2, GuardPin1, GuardPin2, SenseGuardPin1, SenseGuardPin2, Wire, Quality, TestResult, MeasureType, Recycle, Frequency, Volt, SettlingWave, BoardOffset, ResSer, ResPar, ResGuardPin1, CapGuardPin1, ResGuardPin2, CapGuardPin2,)

Main Parameters

Value: [0 -100 Henry]
This parameter indicates the expected inductance value to be measured. It is expressed in Henry, with possible values included in the interval: 0-100. The generator and meter in use for the measurement are set according to the expected value indicated in "Value".

TolPos: [0-100%]
This parameter indicates the maximum positive tolerance accepted in the component measurement. It is expressed as a percentage, with possible values included in the interval: 0-100.

TolNeg: [0-100%]
This parameter indicates the maximum negative tolerance accepted in the component measurement. It is expressed as a percentage, with possible values included in the interval.

Pin1: [0-N]
This parameter indicates the channel connected to the positive terminal of the component to be measured, where positive is the pole connected to the generator that stimulates the component by injecting current or by applying voltage. This parameter is expressed as a whole number, with possible values included in the interval: 0-N. If "Pin1" is 0, the macro is not executed.

Pin2: [0-N]
This parameter indicates the channel connected to the negative terminal of the component to be measured, where negative is the terminal opposite to the positive terminal of the component to be measured. This parameter is expressed as a whole number, with possible values included in the interval: 0-N. If "Pin2" is 0, the macro is not executed.

Optional Parameters

SensePin1: [0-N]
This parameter indicates the channel connected to the positive terminal of the voltage meter, which, for 4 or 6 wires measurements, is connected to the positive pole of the resistance to be measured. For 2 and 3 wires measurements, the voltage meter is internally connected to the generator that stimulates the component to be measured. The parameter is expressed as a whole number, with possible values included in the interval: 0-N. If "SensePin1" is 0, no channel is used.

SensePin2: [0-N]
This parameter indicates the channel connected to the negative terminal of the voltage meter, which, for 4 or 6 wires measurements, is connected to the negative pole of the resistance to be measured. For 2 and 3 wires measurements, the voltage meter is internally connected to the generator that stimulates the component to be measured. The parameter is expressed as a whole number, with possible values included in the interval: 0-N. If "SensePin1" is 0, no channel is used.

GuardPin1: [List of numbers included in the interval: 0-N]
This parameter indicates the channels connected to points on the UUT, which, thanks to the "Guarding Generator" and the "Active Guarding" technique, insulates the component under test to perform the measurement. The numbers listed in the parameter can have values between 0 and N. If "GuardPin1" is 0, no channel is used.

GuardPin2: [List of numbers included in the interval: 0-N]
This parameter indicates the channels connected to points on the UUT, which, thanks to the "Guarding Generator" and the "Passive Guarding" technique, insulates the component under test to perform the measurement. The numbers listed in the parameter can have values between 0 and N. If "GuardPin2" is 0, no channel is used.

SenseGuardPin1: [0-N]
*This parameter indicates the channel connected to "Guarding Generator" sensing, i.e. the point that gives reference level to the "Guarding Generator". It can have values included in the interval: 0-N. If "SenseGuardPin1" is 0, the "Guarding Generator" sensing is taken from the generator that injects the current needed for measurement. For further details, please refer to Fig. 3-2 and Fig.3.20 of [1] (*Fig. 1-6 *of this manual).*

SenseGuardPin2: [0-8192]
This parameter indicates the channel connected to the "Guarding Generator" sensing, i.e. the point that gives reference level to the "Guarding Generator".
*This parameter is relevant only for 6 wires measurements with "Passive Guarding" insulation technique. it can have values included in the interval: 0-N. If "SenseGuardPin2" is 0 it means that the "Guarding Generator" sensing is taken from the negative pole of the current meter in use to measure the current circulating in the measured component. For further details, please refer to Fig. 3-20 of [1] (*Fig. 1-6 *of this manual).*

Wire: [Auto|2 WIRE|3 WIRE|4 WIRE|6 WIRE]
This parameter indicates the number of wires (or channels) used for measurement.
For further information, see: ***Wire*** *in chapter 2.1 "Parameters with common meaning to several system macros".*

Quality: [0-100%]
This parameter indicates measurement quality degree. For further information, see: ***Quality*** *in chapter 2.1 "Parameters with common meaning to several system macros".*

TestResult: [Test Result|Force Pass|Force Fail|Force Skip]
This parameter determines the kind of result you can obtain by executing the macro. For further information, see: ***TestResult*** *in chapter 2.1 "Parameters with common meaning to several system macros".*

MeasureType: [Normal|Average|RecOnError|Maximum|Minimum|Peak ToPeak]
This parameter defines the kind of elaborations that the macro will perform on the executed measurements. For further information, see: ***MeasureType*** *in chapter 2.1 "Parameters with common meaning to several system macros".*

Recycle: [0-1.000.000]
Indicates the number of times that a measurement must be executed. For further information, see: ***Recycle*** *in chapter 2.1 "Parameters with common meaning to several system macros".*

Frequency: [0-100.000Hz]
This parameter indicates the generator frequency used for measurement; this parameter is relevant if we use an AC generator, that is, "MeasureMode" is set to AC_PASSIVE. This parameter can have one of the values included in the interval: 0-100.000, it is expressed in Hertz. If the value is 0, this means: the frequency of generator in use for measurement is not defined at macro level but at the lower level. ("Drivers" and "DSP environment" for internal instrument management). See Fig. 1-1

Volt [0 -100 Volt]
This parameter indicates the voltage value used for resistance measurement. If the generator in use is a voltage generator, this value corresponds to the generator programming value. This parameter can have values included in the interval: 0-100 and is expressed in Volt.

SettlingWave: [0-100]
This parameter allows to change the delay time before acquiring sample measurements. It is expressed as a whole number, with possible values included in the interval: 0-100. Normally, after stimulating the component under measurement, a delay time is needed before measurements begin to exit the initial temporary regimes due to the existing of capacitances and inductances both in the module containing the measurement instruments and in the UUT. Increasing the value of "SettlingWave" parameter, the delay time increases and the accuracy of measurement is improved; but the time needed to perform measurements increases as well.

BoardOffset: [-100-+100 Henry]
The parameter defines the difference between the measured value and the nominal value of the component under measurement. This parameter is necessary for "in-circuit" measurements of a component that can not be insulated using the surveillance "Active Guarding" or "Passive Guarding" techniques. This parameter's value is different for every component and is valid only with the execution of the specific macro instance.

ResSer: [0-100.000.000 Ohm]
This parameter indicates the resistive in series value to the inductance to be measured. It is expressed in Ohm, with possible values included in the interval: 0 -100.000.000. The VIVA software sets this parameter when creating the program or during the "Autodebug" o "Autolearn" mode execution. It can be manually modified from the Debug Environment.

ResPar: [0-100.000.000 Ohm]
This parameter indicates the resistive in parallel value to the capacitance to be measured. It is expressed in Ohm, with possible values included in the interval: 0-100.000.000. The VIVA software sets the value of this parameter when creating the program or when executing in "Autodebug" or "Autolearn" mode. It can be manually modified from the Debug Environment.

ResGuardPin1: [0-100.000.000 Ohm]
Indicates the resistance expected value of the surrounding components (Z_{G1} of Fig. 1-6*) that, if not insulated, may absorb part of the current supplied by the generator. It is expressed in Ohm, with possible values included in the interval: 0-100.000.000. If the value is 0, this means: inactive parameter.*

CapGuardPin1: [0-1 Farad]
Indicates the capacitance expected value of the surrounding components (Z_{G1} of Fig. 1-6) that, if not insulated, may absorb part of the current supplied by the generator. It is expressed in Farad, with possible values included in the interval: 0-1. If the value is 0, this means: inactive parameter.

ResGuardPin2: [0-100.000.000 Ohm]
Indicates the resistance expected value of the surrounding components (Z_{G2} of Fig. 1-6*) that, if no insulated, may have a current circulation so that the value of the current detected by the meter differs from the value of current circulating in Z_X. It is expressed in Ohm, with possible values included in the interval: 0-100.000.000. If the value is 0, this means: inactive parameter.*

CapGuardPin2: [0-1 Farad]
Indicates the capacitance expected value of the surrounding components (Z_{G2} of Fig. 1-6*) that, if not insulated, may have a current circulation so that the value of current detected by the meter differs from the value of current circulating in Z_X. It is expressed in Farad, with possible values included in the interval: 0-1. If the value is 0, this means: inactive parameter.*

2.5 TRANSFORMER

The TRANSORMER macro is used to check the transformer-kind components existing on the UUT. To execute checks, the main parameters are referred to component function and to the internal points of the system (channels) where the pins of the component under test are connected. Optional parameters are referred to the measurement mode execution of the macro.

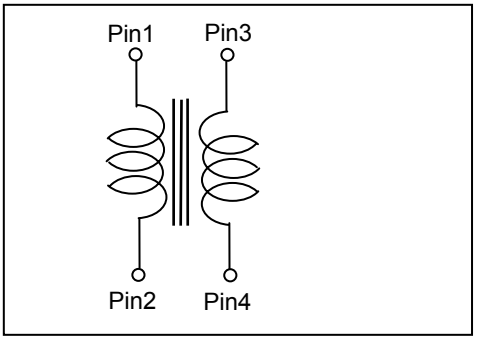

Below, you will find a brief description of the macro parameters, describing the main and then the optional parameters.

TRANSORMER (Name, ModuleType, TolNeg, PrimaryPin1, PrimaryPin2, SecondaryPin1, SecondaryPin2, ClusterName, Kfactor, TolPos, MeasureMode, TestResult, MeasureType, Recycle, Quality, Frequency, PrimaryCurrent, PrimaryVolt, SettlingWave)

Main parameters

Name:
Indicates the name of the component to be tested. The component name is the first element of the pair identifying the node on the UUT: <ComponentName-PinNumber>.

ModuleType: [NONE|VL|VBS|VL_DYNAMIC]
Identifies the kind of macro used, i.e. the language used to develop it. It can have one of the following tables:

NONE	The macro in use is written with VIVA native language.
VL	The macro in use is written with VIVA Language (VL). The macro is executed in the static mode. This is the default value of macro RELAIS.
VBS	The macro in use is written in Visual Basic Script. (VBS).
VL_DYNAMIC	The macro in use is written in VIVA Language Dynamic (VL_DYNAMIC). The macro is executed in the dynamic mode.

TolPos: [0-100%]
Indicates the maximum positive tolerance accepted in component measurement. It is expressed in percentage, with possible values included in the interval: 0-100.

TolNeg: [0-100%]
Indicates the maximum negative tolerance accepted in component measurement. It is expressed in percentage, with possible values included in the interval: 0-100

PrimaryPin1: [0-N]
Indicates the channel connected to the positive terminal of the component under measurement, where positive is the pole connected to the generator that stimulates the component by injecting current or by applying voltage. It is expressed as a whole number, with possible values included in the interval: 0-N. If "PrimaryPin1" is 0, the macro is not executed. For the "transformer" component, this channel is connected to the node which identifies a pin of the transformer primary wrapping.

PrimaryPin2: [0-N]
Indicates the channel connected to the negative terminal of the component under measurement, where negative is the terminal opposite to the positive terminal of component under measurement. It is expressed as a whole number, with possible values included in the interval: 0-N. If "PrimaryPin2" is 0, the macro is not executed. For the "transformer" component, this channel is connected to the other node which identifies the other pin transformer primary wrapping.

SecondaryPin1: [0-N]
Indicates the channel connected to the positive terminal of meter in use, connected with the transformer secondary wrapping. It is expressed as a whole number, with possible values included in the interval: 0-N. If "SecondaryPin1" is 0, the macro is not executed. For the "transformer" component, this channel is connected to the node which identifies a of the transformer secondary wrapping.

SecondaryPin2: [0-N]
Indicates the channel connected to the negative terminal of the meter in use, connected with transformer secondary wrapping. It is expressed as a whole number, with possible values included in the interval: 0-N. If "SecondaryPin2" is 0, the macro is not executed. For the "transformer" component, this channel is connected to the other node which identifies the other pin of the transformer secondary wrapping.

Optional parameter

ClusterName: [String]
Indicates the name of the cluster in use to encode the macro. The word "cluster" identifies in the VL environment the code included between the two instructions: START "ClusterName", " Cluster Parameters.; and ENDTEST;. For the TRANSFORMER macro the default value is "Transformer", which identifies the part of code developed in VL to check transformer components.

Kfactor: [0-10000]
Indicates the component transformation code, i.e. the ratio between the secondary wrapping voltage and that of primary wrapping. This parameter is relevant for positive values ("Ffactor" > 0). If "Kfactor" is 0, the macro is executed and "Kfactor" value is considered as corresponding to 1.

MeasureMode: [CURRENT|VOLTAGE]
Indicates the kind of meter in use. It can have one of the following values:

CURRENT	*The instrument in use is a current meter.*
VOLTAGE	*The instrument in use is a voltage meter.*

TestResult: [Test Result|Force Pass|Force Fail|Force Skip]
This parameter determines the kind of result you can obtain by executing the macro. For further information, see: ***TestResult*** *in chapter 2.1 "Parameters with common meaning to several system macros".*

MeasureType: [Normal|Average|RecOnError|Maximum|Minimum|Peak ToPeak]
This parameter defines the kind of elaborations that the macro will perform on the executed measurements. For further information, see: ***MeasureType*** *in chapter 2.1 "Parameters with common meaning to several system macros".*

Recycle: [0-1.000.000]
Indicates the number of times that a measurement must be executed. For further information, see: ***Recycle*** *in chapter 2.1 "Parameters with common meaning to several system macros".*

Quality: [0-100%]
This parameter indicates measurement quality degree. For further information, see: ***Quality*** *in chapter 2.1 "Parameters with common meaning to several system macros".*

Frequency: [0-100.000Hz]
This parameter indicates the generator frequency used for measurement. The parameter can have values in the range 0-100.000 and the unit of measure is Hertz.

PrimaryCurrent: [0-0,5 Ampere]
This parameter indicates the current value that flows in the primary circuit of the transformer. The parameter can have values in the range 0-0,5 and the unit of measure is Ampere.

PrimaryVolt: [0-100 Volt]
This parameter indicates the voltage value applied to the primary circuit of the transformer. The parameter can have values in the range 0-100 and the unit of measure is Volt.

SettlingWave: [0-100]
This parameter allows to change the delay time before sample measurement acquisition begins. It is expressed as a whole number and can have values included between: 0-100. A delay time is normally required when stimuli are applied to the component to be measured, before measurements begin, to exit the initial temporary regimes due to the existence of inductances in the module containing measurement instruments and in the UUT. Increasing the "SettlingWave" value, the delay time increases too and accuracy of measurement is improved: of course the time needed to execute the measurement increases too.

2.6 RELAYS

The RELAYS macro is used to check the relays-kind components existing on the UUT. To execute checks, the main parameters are referred to component function and to the internal points of the system (channels) where the pins of the component under test are connected. Optional parameters are referred to the measurement mode execution of the macro.

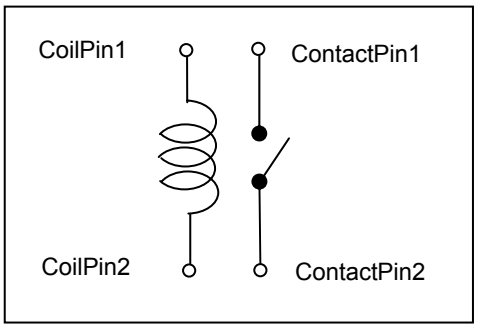

Below, you will find a brief description of macro parameters, describing the main parameters first and then the optional.

Main parameters

Name:
Indicates the name of the under test component. This is the first element of the pair identifying the node on the UUT: <ComponentName-PinNumber>.

ModuleType: [NONE|VL|VBS|VL_DYNAMIC]
Identifies the kind of macro in use, i.e. the language used to develop the macro. It can have one of the following values:

NONE	The macro in use is written in VIVA native language.
VL	The macro in use is written in VIVA Language (VL). The macro is executed in the static mode. This is the default value for RELAYS macro.
VBS	The macro in use is written in Visual Basic Script. (VBS).
VL_DYNAMIC	The macro in use is written in VIVA Language Dynamic (VL_DYNAMIC). The macro is executed in the dynamic mode.

CoilPin1: [0-N]
Indicates the channel connected to the positive terminal of the component to be measured, where positive is the pole connected to the generator stimulating the component by injecting current or by applying voltage. This parameter is expressed as a whole number, with possible values included in the interval: 0-N. If "CoilPin1" is 0, the macro is not executed. For the relays component this channel is connected to the node identifying a pin of the relays reel relays.

CoilPin2: [0-N]
Indicates the channel connected to the negative terminal of the component to be measured, where negative is the terminal opposite to the positive terminal of the component under measurement. It is expressed as a whole number, with possible values included in the interval: 0-N. If "CoilPin2" is 0, the macro is not executed. For relays component this channel is connected to the other node identifying a pin of the relays reel.

ContactPin1: [0-N]
Indicates the channel connected to one of the two component pins to be measured. It is expressed as a whole number, with possible values included in the interval: 0-8.192. If "ContactPin1" is 0, the macro is not executed. For relays component, this channel is connected to the node identifying a fin of relays contacts.

ContactPin2: [0-N]
Indicates the channel connected to one of the two component pins to be measured. It is expressed as a whole number, with possible values included in the interval: 0-N. If "ContactPin2" is 0, the macro is not executed. For relays component, this channel is connected to the node identifying the other pin of relays contacts.

Optional parameters

ClusterName [String]
Indicates the cluster name used to encode the macro. Cluster, in VL environment means the code included between the two instructions START "ClusterName", " Cluster Parameters….; and ENDTEST;. For the RELAYS macro the default value is "Relays", that identifies the part of the code developed in VL for relays components checking.

ContactMode [OPEN|CLOSE]
Indicates the checking performed on relays contacts. This value must be adequate to "PowerCoil"value. It can have one of the following values:

OPEN	*The macro checks the absence of connection between "ContactPin1" and "ContactPin2".*
CLOSE	*The macro checks the existence of connection between "ContactPin1" and "ContactPin2".*

ContactImpedance [-1, 10.000.000.000 Ohm]
Indicates the value of impedance between relays contacts: "ContactPin1" and "ContactPin2". This value depends on the status of contacts to be measured: for open contacts, impedance has high values while for close contacts impedance has low values. This parameter can have values included in the interval 0-10.000.000.000 and is expressed in Ohm. If the value for "ContactImpedance" is –1, this means that the value is calculated during program execution according to the value of "ContactVoltage" and "ContactCurrent".

PowerCoil [ON|OFF]
Indicates if the relays reel must be solicited or not. It can have one of the following values:

ON	*The relays reel must be solicited.*
OFF	*The relays reel must not be solicited..*

CoilVoltage [0 -100 Volt]
Indicates the value of voltage applied to the relays reel. Possible values are included in the interval: 0-100 and is expressed in Volt.

CoilCurrent [0 -0,5 Ampere]
Indicates the value of current injected to the relays reel. Possible values are included in the interval: 0-0,5 and is expressed in Ampere.

CoilTime [0-1sec]
Indicates measurement lasting, i.e. the time in which the relays reel is solicited and corresponds to the reel replying time. It is expressed in seconds.

ContactVoltage [0 -100 Volt]
Indicates the value of voltage applied to relays contacts to check continuity and interruption between "ContactPin1" and "ContactPin2" . Possible values are included in the interval: 0-100 and is expressed in Volt.

ContactCurrent [0 -0,5 Ampere]
Indicates the value of current injected to relays contacts to check continuity and interruption between "ContactPin1" and "ContactPin2". Possible values are included in the interval: 0-0,5 and is expressed in Ampere.

ContactTime [0-1sec]
Indicates the delay time in contacts commutation, that is the time needed to contacts to commute after the reel solicitation. This parameter is expressed in seconds.

TestResult: [Test Result|Force Pass|Force Fail|Force Skip]
This parameter determines the kind of result you can obtain by executing the macro. For further information, see: ***TestResult*** *in chapter 2.1 "Parameters with common meaning to several system macros".*

MeasureType: [Normal|Average|RecOnError|Maximum|Minimum|Peak ToPeak]
This parameter defines the kind of elaborations that the macro will perform on the executed measurements. For further information, see: ***MeasureType*** *in chapter 2.1 "Parameters with common meaning to several system macros".*

Recycle: [0-1.000.000]
Indicates the number of times that a measurement must be executed. For further information, see: ***Recycle*** *in chapter 2.1 "Parameters with common meaning to several system macros".*

CapPar [0-1F]
This parameter indicates the capacitive parallel value to the resistance under measurement. It is expressed in Farad and can have values going from 0 to 1. If the value is 0, this means: inactive parameter. The value is set by VIVA software when creating the program or when executing the program in "Autodebug" o "Autolearn" mode. This parameter can be set manually in the Debug Environment.

2.7 DIODE (DIODE_INV, DIODE2, DIODE2_INV)

The DIODE macro is used to check the diode-kind components existing on the UUT. The diodes are components with two terminals, called respectively anode and cathode; current can flow from the anode to the cathode but not vice versa. The DIODE macro is used to check the direct polarity, that is, current flowing from the anode to the cathode. To check inverted polarity (i.e. current flowing to the cathode to the anode) you must execute the DIODE_INV macro.
To execute the checks, the main parameters are referred to the functionality of the component to be verified and to the internal points of the system (channels) where the pins of the component under test are connected. The optional parameters are related to measurement mode execution.

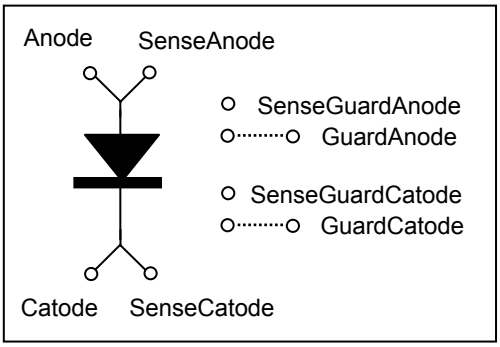

For the diode-kind components, four macros are available, with the following meaning:

DIODE	macro used to check the functionality of a directly polarized diode.
DIODE_INV	macro used to check the functionality of an inverted polarized diode.
DIODE2	same as the macro DIODE. Needed for those components whose functionalities can be partitioned with two elementary functionalities of the diode-kind. For example, a transistor, apart from other functionalities, can be considered as well as two diodes (considering junctions base-emitter and base-collector). With the VIVA data base you can associate a function to a component, but more than one macro, using different names[3].
DIODE2_INV	same as the macro DIODE_INV. (see DIODE2 macro description above for its utility).

Following, a brief description of the macro parameters, considering first the main and then the optional parameters.

DIODE **(Value, TolPos, TolNeg, Anode, Catode, SenseAnode, SenseCatode, GuardAnode, GuardCatode, SenseGuardAnode, SenseGuardCatode, Wire, Quality, JunctionMode, TestResult, MeasureType, Recycle, Time, Current, ResPar, CapPar, ResGuardPin1, CapGuardPin1, ResGuardPin2, CapGuardPin2)**

Main parameters

Value: [0 -100 Volt]
Indicates the expected voltage drop value on the diode when you inject a current flowing from the anode to the cathode. It is expressed in Volt, with possible values included in the interval: 0-100. The generator and the meter in use for measurement, are set according to the expected value indicated with the "Value" parameter.

TolPos: [0-100%]
Indicates the highest positive tolerance accepted in the component measurement. It is expressed as a percentage, with possible values included in the interval: 0-100.

TolNeg: [0-100%]
Indicates the highest negative tolerance accepted in the component measurement. It is expressed as a percentage, with possible values included in the interval: 0-100.

[3] With the VIVA software, the "diode" function, containing the DIODE macro, associated by default to diode-kind components. So, only the functionality of the directly polarized diode is verified! To verify also the functionality of the inverted polarized diode, you must add the"DIODE_INV" macro to the function "Diode". Another solution is to create a new function with two macros: "DIODE" and "DIODE_INV". So you can associate to the diode-kind components the function which checks only the directly polarized junction or that to check the two polarities.

Anode: [0-N]
Indicates the channel connected to the positive terminal (anode) of the component under measurement, where positive is the pole connected to the generator that stimulates the component by injecting current or by applying voltage. It is expressed as a whole number, with possible values included in the interval: 0-N. if "Anode" is 0, the macro is not executed.

Cathode: [0-N]
Indicates the channel connected to the negative terminal (cathode) of the component under measurement, where negative is the terminal opposite to the positive terminal of the component under measurement. It is expressed as a whole number, with possible values included in the interval: 0-N. If "Cathode" is 0, the macro is not executed.

Optional parameters

SenseAnode: [0-N]
Indicates the channel connected to the positive terminal of the voltage meter, which, for 4 or 6 wires measurements, is connected with the positive pole (anode) of the component under measurement. For 2 and 3 wires measurements, the voltage meter is connected internally to the generator that stimulates the component under measurement. It is expressed as a whole number, with possible values included in the interval: 0-N. If "SenseAnode"is 0, this means that no channel is in use.

SenseCatode: [0-N]
Indicates the channel connected to the negative terminal of the voltage meter, which, for 4 or 6 wires measurements, is connected to the negative pole (cathode) of the component under measurement. For 2 and 3 wires measurements, the voltage meter is connected internally to the generator that stimulates the component under measurement. It is expressed as a whole number, with possible values included in the interval: 0-N. If "SensePin2" is 0, this means that no channel is in use.

GuardAnode: [List of numbers included in the interval: 0-N]
Indicates the channels connected to the points of the UUT, which, through the "Guarding Generator" and the "Active Guarding" technique, allows to insulate the component under test to execute measurements.
This parameter <u>is relevant only if</u> the parameters "MeasureMode" and "Wire" indicate that the insulating technique in use is the "Active Guarding". ("Measure MODE" = "DC_ACTIVE" & "Wire" = "3Wire" | "6Wire"). The possible values of this parameter are included in the interval: 0-N. If "GuardAnode" is 0, this means that no channel is in use.

GuardCatode: [List of numbers included in the interval: 0-N]
Indicates the channels connected to the points of the UUT, which through the" Guarding Generator" and the "Passive Guarding" technique, allows to insulate the component under test to execute measurements. The numbers listed in this parameter can have values included in the interval: 0-N. If "GuardCatode" is 0, this means that no channel is in use.

SenseGuardAnode: [0-N]
Indicates the channel connected to the "Guarding Generator" sensing, i.e. the point which provides the reference level for the "Guarding Generator".

SenseGuardCathode: [0-N]
Indicates the channel connected to the "Guarding Generator" sensing, i.e. the point that provides the reference level for the "Guarding Generator".

Wire: [Auto|2 WIRE|3 WIRE|4 WIRE|6 WIRE]
This parameter indicates the number of wires (or channels) used for measurement.
*For further information, see: **Wire** in chapter 2.1 "Parameters with common meaning to several system macros".*

Quality: [0-100%]
*This parameter indicates measurement quality degree. For further information, see: **Quality** in chapter 2.1 "Parameters with common meaning to several system macros".*

JunctionMode: [Direct|Invert]
Indicates the measurement mode, i.e. if the functionality of the directly polarized diode is verified or the functionality of the inverted polarized diode. This parameter can have one of the following values:

Direct	*The diode is polarized directly, in a way that the current flows from the anode to the cathode.*
Invert	*The diode is inverted polarized, In a way that the current cannot flow from the cathode to the anode.*

In the DIODE macro, the "JunctionMode" parameter has the default value: "Direct". The DIODE_INV macro, used to check the inverted polarity diode function, has the "JunctionMode" value set to "Invert" (default value).

TestResult: [Test Result|Force Pass|Force Fail|Force Skip]
This parameter determines the kind of result you can obtain by executing the macro. For further information, see: ***TestResult*** *in chapter 2.1 "Parameters with common meaning to several system macros".*

MeasureType: [Normal|Average|RecOnError|Maximum|Minimum|Peak ToPeak]
This parameter defines the kind of elaborations that the macro will perform on the executed measurements. For further information, see: ***MeasureType*** *in chapter 2.1 "Parameters with common meaning to several system macros".*

Recycle: [0-1.000.000]
Indicates the number of times that a measurement must be executed. For further information, see: ***Recycle*** *in chapter 2.1 "Parameters with common meaning to several system macros".*

Time: [0-1 sec]
Indicates measurement lasting. Possible values are included in the interval: 0-1 and is expressed in seconds. If "Time" is 0, this means that measurement lasting has not been defined at a macro level but at a lower level. ("Drivers" and "DSP environment" for internal instruments management). See Fig. 1-1.

Current: [0-0,5 A]
Indicates the value of the current injected on the junction. The parameter is expressed in A, with possible values included in the interval: 0-0,5. . If "Current" is= 0 its value is not defined at the macro level but at the lower level. ("Drivers" and "DSP environment" for internal instruments management). See Fig. 1-1.

ResPar: [0-100.000.000 Ohm]
Indicates the resistive value parallel to the Junction to be measured. It is expressed in Farad, with possible values included in the interval: 0-100.000.000. The VIVA software determines the value of this parameter when generating the program or when the program is executed in Autodebug or Autolearn mode. The parameter can be modified manually from the Debug Environment.

CapPar: [0-1 Farad]
Indicates the capacitive value in parallel to the junction to be measured. It is expressed in Farad, with possible values included in the interval: 0-1. The VIVA software defines the value of this parameter when generating the program or when the program is executed in the Autodebug or Autolearn mode. The parameter can be modified manually from "Debug Environment".

ResGuardPin1: [0-100.000.000 Ohm]
Indicates the expected resistive value of the surrounding components (Z_{G1} of Fig. 1-6*) that, if not insulated, may absorb part of the current supplied by the generator. This parameter is expressed in Ohm, with possible values included in the interval: 0-100.000.000. If the value is 0, this means: inactive parameter.*

CapGuardPin1: [0-1 Farad]
Indicates the expected capacitive value of the surrounding components (Z_{G1} of Fig. 1-6) that, if not insulated, may absorb part of the current supplied by the generator. It is expressed in Farad, with possible values included in the interval: 0-1. If the value is 0, this means: inactive parameter.

ResGuardPin2: [0-100.000.000 Ohm]
Indicates the expected resistive value of the surrounding components (Z_{G2} of Fig. 1-6*) that, if not insulated, may have a circulation of current so that the value of current detected by the meter differs from the value of the current circulating in Z_X. The parameter is expressed in Ohm, with possible values included in the interval: 0-100.000.000. If the value is 0, this means: inactive parameter.*

CapGuardPin2: [0-1 Farad,]
Indicates the expected capacitive value of the surrounding components (Z_{G2} of Fig. 1-6*) that, if not insulated, may have a circulation of current so that the value of current detected by the meter differs from the value of the current circulating in Z_X. The parameter is expressed in Farad, with possible values included in the interval: 0-1. If the value is 0, this means: inactive parameter.*

2.8 ZENER (ZENER_DIR)

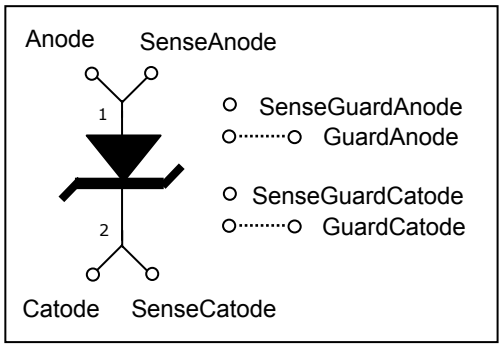

The ZENER macro is used to check the zener kind components present on the UUT. The zener are components with two terminals, called anode and cathode; the current can flow from the anode to the cathode but not vice versa, unless the inverted voltage applied goes beyond a value after which the inverted current increases remarkably causing the so called "zener effect". The ZENER macro is used to verify the inverted polarity, i.e. the current flows from the cathode to the anode, once exceeded the "zener voltage" value. The ZENER_DIR macro is used to verify the direct polarity i.e. that the current can flow from the anode to the cathode, as it happens in an ordinary diode.
To execute the verifications, the main parameters are those related to the component functionality to be checked and to the internal system points (channels) where the component pins to be tested are connected. The optional parameters are those related to the macro measurement modes.

For the zener components two macros are available:

ZENER macro used to check a zener diode functionality with inverted polarity.
ZENER_DIR macro used to check a zener diode functionality with direct polarity.

The function "Zener", distributed with the VIVA software, available in "Function & Macro data base" (Fig. 3-1), uses the two ZENER and ZENER_DIR macros to check a zener kind component full functionality.

Below, a synthetic description of the macro parameters. The main parameters are described first, then the optional parameters.

ZENER **(Value, TolPos, TolNeg, Anode, Catode, SenseAnode, SenseCatode, GuardAnode, GuardCatode, SenseGuardAnode, SenseGuardCatode, Wire, Quality, JunctionMode, TestResult, MeasureType, Recycle, Time, Current, ResPar, CapPar, ResGuardPin1, CapGuardPin1, ResGuardPin2, CapGuardPin2)**

Main parameters

Value: [0 -100 Volt]
Indicates the expected voltage drop value at the junction ends checked with the macro. The parameter is expressed in Volt, with possible values included in the interval 0-100. This value should be found together with the CAD information stored[4]in the board data base ("board CAD data base" of Fig. 3-1) .The generator and meter in use for the measurement, will be set according to the expected value of the parameter "Value".

TolPos: [0-100%]
Indicates the maximum positive tolerance accepted in the component measurement. It is expressed as a percentage, with possible values included between 0-100.

TolNeg: [0-100%]
Indicates the maximum negative tolerance accepted in the component measurement. It is expressed as a percentage, with possible values included in the interval 0-100.

[4] For the zener kind components, the value found in "board CAD data base" is the "zener voltage". Value. The ZENER macro uses this value while the ZENER_DIR macro uses a default value. In the "Debug Environment" thay can be modified by the user.

Anode: [0-N]
Indicates the channel connected to the positive terminal (anode) of the component under measurement, considering as positive the pole connected to the generator which stimulates the component by injecting current or by applying voltage. The parameter is indicated as a whole number, with possible values included in the interval: 0-N. If "Anode" is = 0, the macro is not executed.

Cathode: [0-N]
Indicates the channel connected to the negative terminal (cathode) of the component under measurement, where negative is the terminal opposite to the positive terminal of the component under measurement. The parameter is expressed as a whole number, with possible values included in the internal: 0-N. If "Cathode" is= 0, the macro is not executed

Optional Parameters

SenseAnode: [0-N]
Indicates the channel connected to the voltage meter positive terminal, which, for 4 or 6wires measurements, is connected to the positive pole (anode) of the component under measurement. For the 2 and 3 wires measurement, the voltage meter is connected internally to the generator which stimulates the component under measurement. The parameter is expressed as a whole number, with possible values included in the interval: 0-N. If "SenseAnode" = 0, this means that no channel is in use.

SenseCatode: [0-N]
Indicates the channel connecter to the negative terminal of the voltage meter which, for 4 o 6 wires measurements, is connected to the negative pole (cathode) of the component under measurement. For 2 and 3 wires measurements, the voltage meter is connected internally to the generator which stimulates the component under measurement. The parameter is expressed as a whole number, with possible values included in the internal: 0-N. Se the parameter "SensePin2" is=0, it means that no channel is in use.

GuardAnode: [List of numbers, included in the internal: 0-N]
Indicates the channels connected to the points of the UUT which, through the "Guarding Generator", allow insulating electrically the component under test to execute the measurement. The numbers listed in the parameter have possible values included in the interval: 0-N. If the parameter "GuardAnode" is = 0, it means that no channel is in use

GuardCatode: [List of numbers included in the internal: 0-N]
Indicates the channels connected to the points of the UUT which, through the "Guarding Generator", allow insulating electrically the component under test to execute the measurement. The numbers listed in the parameter have possible values included in the interval: 0-N. If the parameter "GuardCatode" is = 0, it means that no channel is in use

SenseGuardAnode: [0-N]
Indicates the channel connected to the "Guarding Generator" sensing, i.e. the point which gives the reference level for the "Guarding Generator".

SenseGuardCatode: [0-N]
Indicates the channel connected to the "Guarding Generator" sensing, i.e. the point which gives the reference level for the "Guarding Generator".

Wire: [Auto|2 WIRE|3 WIRE|4 WIRE|6 WIRE]
This parameter indicates the number of wires (or channels) used for measurement.
For further information, see: ***Wire*** *in chapter 2.1 "Parameters with common meaning to several system macros".*

Quality: [0-100%]
This parameter indicates measurement quality degree. For further information, see: ***Quality*** *in chapter 2.1 "Parameters with common meaning to several system macros".*

JunctionMode: [Direct|Zener]
Indicates the measurement mode, meaning whether the functionality of the directly polarized diode is checked or the inverted polarity diode. The possible values for this parameter are::

Direct	*The diode has direct polarity, in a way that the current flows from the anode to the cathode.*
Zener	*The diode has inverted polarity, in a way that the current can not flow from the cathode to the anode until the value of the "zener voltage" is exceeded.*

With the ZENER macro, The "JunctionMode" default value is "Zener". The ZENER_DIR macro used to check the direct polarity diode has the parameter "JunctionMode" set to the default value "Direct".

TestResult: [Test Result|Force Pass|Force Fail|Force Skip]
This parameter determines the kind of result you can obtain by executing the macro. For further information, see: ***TestResult*** *in chapter 2.1 "Parameters with common meaning to several system macros".*

MeasureType: [Normal|Average|RecOnError|Maximum|Minimum|Peak ToPeak]
This parameter defines the kind of elaborations that the macro will perform on the executed measurements. For further information, see: ***MeasureType*** *in chapter 2.1 "Parameters with common meaning to several system macros".*

Recycle: [0-1.000.000]
Indicates the number of times that a measurement must be executed. For further information, see: ***Recycle*** *in chapter 2.1 "Parameters with common meaning to several system macros".*

Time: [0-1 sec]
Indicates the measurement lasting; the possible values are included between 0 and 1 (expressed in seconds). If "Time" is = 0, it means that the measurement lasting is not specified at the macro level but at a lower level. ("Drivers" and "DSP environment" for internal instruments management). See Fig. 1-1.

Current: [0-0,5 A]
Indicates the value of current injected on the junction; the parameter is expresses in A, with possible values included in the interval 0-0,5. . If "Current"= 0 its value is not defined at a macro level but at a lower level. ("Drivers" and "DSP environment" for internal instruments management). See Fig. 1-1

ResPar: [0-100.000.000 Ohm]
Indicates the resistive parallel value to the junction under measurement. It is expressed in Ohm, with possible values included in the interval: 0-100.000.000. The VIVA software sets the value of this parameter when creating the program or when executing it in the "Autodebug" or "Autolearn" mode. It can be modified manually from the "Debug Environment".

CapPar: [0-1 Farad]
Indicates the capacitive parallel value to the junction under measurement. It is expressed in Farad, with possible values included in the internal: 0-1. The VIVA software sets the value of this parameter when creating the program or when it is executed in the "Autodebug" or "Autolearn" mode. The parameter can be modified manually from the "Debug Environment".

ResGuardPin1: [0-100.000.000 Ohm]
Indicates the expected resistive value of the surrounding components (Z_{G1} of Fig. 1-6*) that, if not insulated, can absorb part of the current supplied by the generator. The parameter is expressed in Ohm, with possible values included in the internal: 0-100.000.000. If "ResGuardPin1" is ="0", it mean: inactive parameter.*

CapGuardPin1: [0-1 Farad]
Indicates the expected capacitive value of the surrounding components (Z_{G1} of Fig. 1-6) that, if not insulated, can absorb part of the current supplied by the generator. The parameter is expressed in Farad, with possible values included in the internal: 0-1. If "CapGuardPin1" is = "0", it means: inactive parameter.

ResGuardPin2: [0-100.000.000 Ohm]
Indicated the expected resistive value of the surrounding components (Z_{G2} of Fig. 1-6*) that, if not insulated, can have a current flow so that the value of the current detected by the meter is different from the current circulating in Z_X. The parameter is expressed in Ohm, with possible values included in the internal: 0-100.000.000. If "ResGuardPin2" = "0", it means: inactive parameter.*

CapGuardPin2: [0-1 Farad]
Indicates the expected capacitive value of the surrounding components (Z_{G2} of Fig. 1-6*) that, if not insulated, can have a current flow in a way that the value of current detected by the meter differs from the value of current circulating in Z_X. The parameter is expressed in Farad, with possible values included in the internal: 0-1. If "CapGuardPin2" = "0", it means: inactive parameter*

2.9 SCR_ON (SCR_OFF, SCR_ON_INV, SCR_OFF_INV)

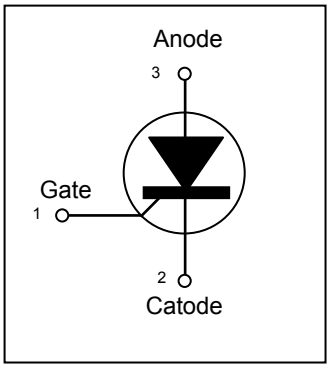

The SCR_ON macro is used to check the scr kind components present on the UUT. The scr are semiconductors that belong to the thrusters family characterized by the "switch" operation (open/closed). The scr are components with three terminals, called: gate cathode and anode; if we connect to the anode a positive voltage in respect to the cathode, unlike the common diode, the scr diode does not let current flow. If, otherwise, we apply a positive voltage on the electrode gate, with respect to the cathode, the component enters in conduction and the current flows into the diode from the anode to the cathode. Once brought to conduction, the SCR diode can no longer be controlled by the managing electrode: it continues to conduct even if the voltage from the "Gate" is removed.

To execute the checks, the main parameters are those related to the functionality of the component to be checked and to the internal points of the system (channels) where the pins of the component to be tested are connected. The optional parameters are those related to the mode by which the macro executes the measurements.

For the scr kind components, four macros are available with the following meaning

SCR_ON	macro used to check the functionality of a scr with direct polarity which comes to conduction by applying a positive pulse to the "Gate terminal.
SCR_OFF	macro equal to SCR_ON macro, used to check the functionality of a scr with direct polarity which does not come to conduction because no positive pulse to the "Gate terminal is applied.
SCR_ON_INV	macro equal to the SCR_ON macro, but with an inverted polarity scr component. The macro checks that the component does not come to conduction
SCR_OFF_INV	macro equal to the SCR_OFF macro, but with an inverted polarity scr component. The macro checks that the component does not come to conduction.

Following, a synthetic description of the parameters of the macro is provided, describing the main parameters first and then the optional parameters

SCR_ON **(Name, ModuleType, TolNeg, Gate, Cathode, Anode, ClusterName, TolPos, MeasureMode, TestResult, MeasureType, Recycle, Time, Incurrent, InVvoltt, OutCurrent, OutVolt)**

Main Parameters

Name:
Indicates the name of the component to be tested. The component name is the first element of the couple identifying the node on the UUT: <ComponentName-PinNumber>.

ModuleType: [NONE|VL|VBS|VL_DYNAMIC]
Identifies the kind of macro in use, i.e. the language used to develop the Macro. The parameter can have one of the following values:

NONE	The macro used is written in VIVA native language.
VL	The macro used is written in VIVA Language (VL). The macro will be executed in the static mode. This is the default value for the RELAIS macro.
VBS	The macro used is written in Visual Basic Script. (VBS).
VL_DYNAMIC	The macro used is written in VIVA Language Dynamic (VL_DYNAMIC). The macro is executed in the dynamic mode

TolPos: [0-100%]
Indicates the maximum positive tolerance accepted in the component measurement. The parameter is expressed as a percentage, with possible values included in the interval:0-100.

TolNeg: [0-100%]
Indicates the maximum negative tolerance accepted in the component measurement. The parameter is expressed as a percentage, with possible values included in the internal: 0-100.

Gate: [0-N]

Indicates the channel connected to terminal 1 of the component under measurement, where terminal 1 is the terminal "Gate" of the scr component. The parameter is expressed as a whole number, with possible values included in the interval: 0-N. If "Gate" = 0 the macro is not executed. For the component "transformer" this channel is connected to the node which identifies a pin of the transformer primary wrapping.

Cathode: [0-N]
Indicates the channel connected to terminal 2 of the component under measurement, where terminal 2 is the "Cathode" terminal of the scr component. The parameter is expressed as a whole number, with possible values included in the internal: 0-N. If "Cathode" = 0, the macro is not executed. For the component "transformer" this channel is connected to the other node that identifies the other pin of the transformer primary wrapping.

Anode: [0-N]
Indicates the channel connected to terminal 3 of the component under measurement, where terminal 3 is the "Anode" terminal of the scr component. The parameter is expressed as a whole number, with possible values included in the interval 0-N. If "Anode" = 0 the macro is not executed. For the component "transformer" this channel is connected to the node which identifies a pin of the secondary wrapping of the transformer

Optional parameters

ClusterName: [String]
Indicates the name of the cluster used to encode the macro. Cluster, in VL environment, indicates the code included between the two instructions START "ClusterName" " Cluster Parameters….; and ENDTEST;. For SCR_ON, SCR_OFF, SCR_ON_INV and SCR_OFF_INV macros, the default value for this parameter is "SCR" which identifies the part of code developed in VL to check the scr components.

Value: [0 -100 Volt]
Indicates the voltage drop expected values at the ends of the junction checked with the macro when the component is in the conduction status. The parameter is expressed in Volt, with possible values included in the internal: 0-100. This "Value" should be found in the CAD information of the board data base ("board CAD data base" of Fig. 3-1). The generator and the meter used for measurement, will be set according to the expected value indicated with the parameter "Value".
When the component is in no conduction status, the expected voltage drop value is the one used to set the generator which powers the component. (Parameter "OutVolt").

MeasureMode: [On|Off|Inv_On|Inv_Off]
Indicates the measure mode, i.e. if it's checked the functionality of the component with direct polarity (both in conduction and interdiction) or the functionality of the component with inverted polarity (both in conduction and interdiction). The parameter can have one of the following values:

On	*The diode is polarized directly, i.e. in a way that the current flows from the anode to the cathode, and it is checked that conduction happens after applying a voltage pulse on the terminal "Gate".*
Off	*The diode is polarized directly, in a way that the current flows from the anode to the cathode and it is checked that conduction does not happen since no voltage pulse on the terminal "Gate" is applied.*
Inv_On	*The diode has inverted polarity, so that the current can not flow from the anode to the cathode, and it is checked that conduction does not happen after applying a voltage pulse on the terminal "Gate".*
Inv_Off	*The diode has inverted polarity, so that the current can not flow from the anode to the cathode, and it is checked that conduction does not happen by not applying voltage pulses to the terminal "Gate".*

With SCR_ON macro	*The "MeasureMode" default value is: "On".*
With SCR_OFF macro	*The "MeasureMode" default value is:" Off".*
With SCR_ON_INV macro	*The "MeasureMode" default value is: "Inv on".*
With SCR_OFF_INV macro	*The "MeasureMode" default value is: "Inv_Off".*

TestResult: [Test Result|Force Pass|Force Fail|Force Skip]
This parameter determines the kind of result you can obtain by executing the macro. For further information, see: ***TestResult*** *in chapter 2.1 "Parameters with common meaning to several system macros".*

MeasureType: [Normal|Average|RecOnError|Maximum|Minimum|Peak ToPeak]
This parameter defines the kind of elaborations that the macro will perform on the executed measurements. For further information, see: ***MeasureType*** *in chapter 2.1 "Parameters with common meaning to several system macros".*

Recycle: [0-1.000.000]
Indicates the number of times that a measurement must be executed. For further information, see: ***Recycle*** *in chapter 2.1 "Parameters with common meaning to several system macros".*

Time: [0-1 sec]
Indicates measurement lasting. The possible values are included in the internal: 0-1 (expressed in seconds). If "Time" = 0 it means that the measurement lasting is not defined at the macro level but at the lower level. ("Drivers" and "DSP environment" for internal instruments management). See Fig. 1-1.

InCurrent: [0-0,5 Ampere]
Indicates the value of current injected on terminal 1 of the component under measurement, where terminal 1 is the "Gate" terminal of the scr component. The possible values of this parameter are included in the interval: 0-0,5 (expressed in Ampere).

InVolt: [0-100 Volt]
Indicates the voltage value applied on terminal 1 of the component under measurement, where terminal 1 is the "Gate" terminal of the del scr component. The possible values of this parameter are included in the internal: 0-100 (expressed in Volt).

OutCurrent: [0-0,5 Ampere]
Indicates the limit value of the current injected on terminal 3 of the component under measurement, where terminal 3 is the "Anode" terminal. The possible values for this parameter are included in the interval: 0-0,5 (expressed in Ampere).

OutVolt: [0-100 Volt]
Indicates the voltage value applied on terminal 3 of the component under measurement, where terminal 3 is the "Anode" terminal of the scr component. This parameter indicates the setting value of the generator which powers the component to be measured and corresponds to the expected value when the component is in the no conduction status. Possible values are included in the internal: 0-100 and it's expressed in Volt.

2.10 TRIAC_ON (TRIAC_OFF, TRIAC_ON_INV, TRIAC_OFF_INV)

The TRIAC_ON macro is used to check the triac kind components present on the UUT. The triac is a semiconductor belonging to the thyristors family, characterized by the "switch" operation (open/closed). Unlike the SCR components, the TRIAC components allow to control the current in both senses. The triac are components with three terminals, called gate, terminal1 and terminal2. The triac can be considered as two SCR diodes connected in antiparallel, i.e. placed side by side, but with opposite directions . The two SCR anodes become the triac main terminals, and take the name of Terminal1 and Terminal2. The two SCR gates are connected together, becoming the triac gate. As we have said, the TRIAC can be crossed by the current in both senses; Besides, its passage to the "on" status, i.e. conduction, can happen by applying to the gate both a positive or negative voltage.

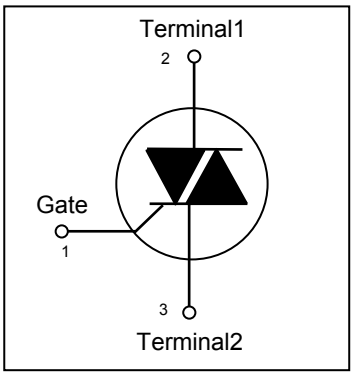

To execute the checks, the main parameters are those related to the component functionality and to system internal points (channels) where the component pins under test are connected. The optional parameters are those related to the modes by which the macro executes measurements.

For the triac kind components four macros are available with the following meaning:

TRIAC_ON	macro used to check the functionality of a triac with direct polarity (positive pole on Terminal1) which comes to conduction by applying both a positive and negative pulse to the terminal "Gate.
TRIAC_OFF	macro, equal to the TRIA_ON macro, used to check the functionality if a triac with direct polarity which does not enter in conduction since no pulse, positive or negative, to the terminal "Gate.
TRIAC_ON_INV	macro, equal to the TRIAC_ON macro, but with an inverted polarity triac (positive pole on Terminal2). The macro checks that the component comes to conduction applying a pulse (both positive and negative), to the terminal "Gate.
TRIAC_OFF_INV	macro, equal to the TRIAC_OFF macro, but with a triac component with inverted polarity. The macro checks that the component does not come to conduction since no pulse, (positive or negative) is applied to the terminal "Gate.

Below, a synthetic description of the macro parameters, describing the main parameters first and then the optional parameters.

TRIAC_ON **(Name, ModuleType, TolNeg, Gate, Cathode, Anode, ClusterName, TolPos, MeasureMode, TestResult, MeasureType, Recycle, Time, Incurrent, InVvoltt, OutCurrent, OutVolt)**

Main parameters

Name:
Indicates the name of the component to be tested. The component name is the first element of the couple which identifies the node on the UUT: <ComponentName-PinNumber>.

ModuleType: [NONE|VL|VBS|VL_DYNAMIC]
Identifies the kind of macro in use, i.e. the language used to develop the Macro. The possible values of these parameters are:

NONE	The macro in use is written with native VIVA language.
VL	The macro in use is written in VIVA Language (VL). The macro is executed in a static mode. This is the default value of the macro RELAIS.
VBS	The macro in use is written in Visual Basic Script. (VBS).
VL_DYNAMIC	The macro in use is written in VIVA Language Dynamic (VL_DYNAMIC). The macro is executed in the dynamic mode.

TolPos: [0-100%]
Indicates the maximum positive tolerance accepted in the component measurement. The parameter is expressed as a percentage, with possible values included in the internal: 0-100.

TolNeg: [0-100%]
Indicates the maximum negative tolerance accepted in the component measurement. The parameter is expressed as a percentage, with possible values included in the internal: 0-100.

Gate: [0-N]
Indicates the channel connected to pin 1 of the component under measurement. The parameter is expressed as a whole number, with possible values included in the internal: 0-N. If "Gate" = 0 the macro is not executed. For the component "transformer" this channel is connected to the node which identifies a pin of the transformer primary wrapping.

Terminal1: [0-N]
Indicates the channel connected to pin 2 of the component under measurement. The parameter is expressed as a whole number, with possible values included in the interval: 0-N. If "Cathode" is = 0 the macro is not executed. For the component "transformer this channel is connected to the other node which identifies the other pin of the transformer primary wrapping.

Terminal2: [0-N]
Indicates the channel connected to pin 3 of the component under measurement. The parameter is expressed as a whole number, with possible values included in the internal: 0-N. If "Anode" is = 0 the macro is not executed. For the component "transformer" this channel is connected to the node which identifies a pin of the transformer secondary wrapping.

Optional parameters

ClusterName: [String]
Indicates the name of the cluster used to encode the macro. Cluster in the VL environment, indicates the code included between the instructions START "ClusterName" " Cluster Parameters….; and ENDTEST;. For the TRIAC_ON, TRIAC_OFF, TRIAC_ON_INV and TRIAC_OFF_INV macros the default value of this parameter is "Triac" identifying the part of code developed in VL to check the Triac components.

Value: [0 -100 Volt]
Indicates the voltage drop expected value at the junction ends checked with the macro when the component is in the conduction status. The parameter is expressed in Volt, with possible values included in the interval: 0-100. This value should be found in the cad information for the board data base ("board CAD data base" of Fig. 3-1). The generator and the meter, used for the measurement, are set according to the expected value indicated with the parameter "Value".
When the component is in non conduction status, the expected voltage drop value is the one used to set the generator that powers the component (Parameter "OutVolt").

MeasureMode: [ON|OFF|INV_ON|INV_OFF]
Indicates the measurement mode, i.e. if it's checked the functionality of the component with direct polarity (both in conduction and in interdiction) or the functionality of the component with inverted polarity (both in conduction and in interdiction). The parameter can have one of the following values:

ON	*The diode is polarized directly, i.e. so that the current can flow from the anode to the cathode, and it is checked that conduction happens after applying a voltage pulse on the terminal "Gate".*
OFF	*The diode is polarized directly, i.e. so that the current can flow from the anode to the cathode, and it is checked that the conduction does not happen applying no voltage pulses on the "Gate" terminal.*
INV_ON	*The diode has inverted polarity, i.e. so that the current can not flow from the anode to the cathode, and it is checked that conduction does not happen after applying a voltage pulse on the terminal "Gate".*
INV_OFF	*The diode has inverted polarity, i.e. so that the current can not flow from the anode to the cathode, and it is checked that conduction does not happen by applying no voltage pulses on the terminal "Gate".*

With the TRIAC_ON macro The "MeasureMode" default value is "ON".
With the TRIAC_OFF macro The "MeasureMode" default value is "OFF".
With the macro TRIAC_ON_INV macro the "MeasureMode" default value is "INV_ON".
With the TRIAC_OFF_INV macro The "MeasureMode" default value is "INV_OFF".

TestResult: [Test Result|Force Pass|Force Fail|Force Skip]
This parameter determines the kind of result you can obtain by executing the macro. For further information, see: ***TestResult*** *in chapter 2.1 "Parameters with common meaning to several system macros".*

MeasureType: [Normal|Average|RecOnError|Maximum|Minimum|Peak ToPeak]
This parameter defines the kind of elaborations that the macro will perform on the executed measurements. For further information, see: ***MeasureType*** *in chapter 2.1 "Parameters with common meaning to several system macros".*

Recycle: [0-1.000.000]
Indicates the number of times that a measurement must be executed. For further information, see: ***Recycle*** *in chapter 2.1 "Parameters with common meaning to several system macros".*

Time: [0-1 sec]
Indicates the measurement lasting. The possible values are included between 0 and 1, expressed in seconds. If "Time" is= 0 the measurement lasting is not defined at the macro level but at a lower level. ("Drivers" and "DSP environment" for internal instruments management). See Fig. 1-1.

InCurrent: [0-0,5 Ampere]
Indicates the value of the current injected on pin 1 of the component under measurement,. The possible values for this parameter are included in the interval:0-0,5 (expressed in Ampere).

InVolt: [0-100 Volt]
Indicates the voltage value applied on pin 1 of the component under measurement,. The parameter can have a value included in the interval: 0-100 (expressed in Volt).

OutCurrent: [0-0,5 Ampere]
Indicates the limit value of the current injected on pin 3 of the component under measurement Its possible values are included in the interval:0-0,5 ed (expressed in Ampere).

OutVolt: [0-100 Volt]
Indicates the voltage value applied on pin 3 of the component under measurement. The parameter indicates the setting value of the generator which powers the component under measurement and corresponds to the expected value when the component is in the non conduction status. The possible values for this parameter are included between 0 and 100 (expressed in Volt).

2.11 TRANSISTOR

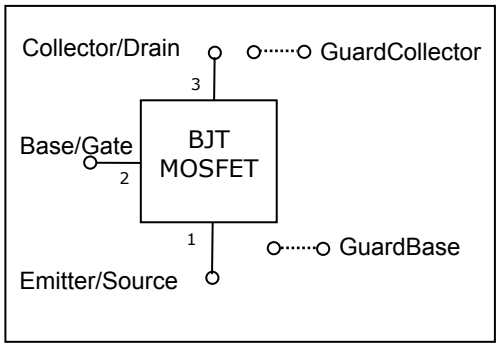

The TRANSISTOR macro is used to check the transistor kind components present on the UUT. The transistors are made up by drugged semi conductors and work as amplifiers or electronic switches.

A first category of transistors is the **BJT** (**B**ipolar **J**unction **T**ransistor). The BJT is made up by different stratum, drugged in different ways, which form NPN o PNP transistor. The central section is the *transistor base*. Modifying the current between the base and a terminal, called emitter, it is possible to modify the current flux between the emitter and a third terminal called collector, causing the amplification of the signal to that terminal. The BJTs can be considered as resistors controlled in current e. Only the BJTs can be defined as current amplifiers. The ratio between the collector current and the base current is called transistor β, and is one of the main parameters of this device. A bipolar transistor can be considered as two united diodes

As electronic switch, the transistor can appear in two statuses:

- **Saturation** when both junctions are polarized directly and the base current does no longer control the amplification effect (the transistor behaves as a closed switch).
- **Interdiction** (*cut-off*) when the voltage base-emitter is too low to allow a satisfactory current flowing (the transistor behaves as an open switch).

A second category of transistors are the so called **MOSFET** (Metal Oxide Semiconductor Field Effect Transistor). Here the three terminals are called: *gate G*, *source S* and *drain D.* Also the MOSFET like the bipolar transistors can be found in two complementary versions: *P* channel or N channel.
While the BJT transistors are mainly used as amplifier in the analog electronics, the MOSFET are widely used in the digital electronic.

The figure here below shows a sample of symbols used to represent the NPN, PNP, the N channel MOSFET and the P channel MOSFET transistors.

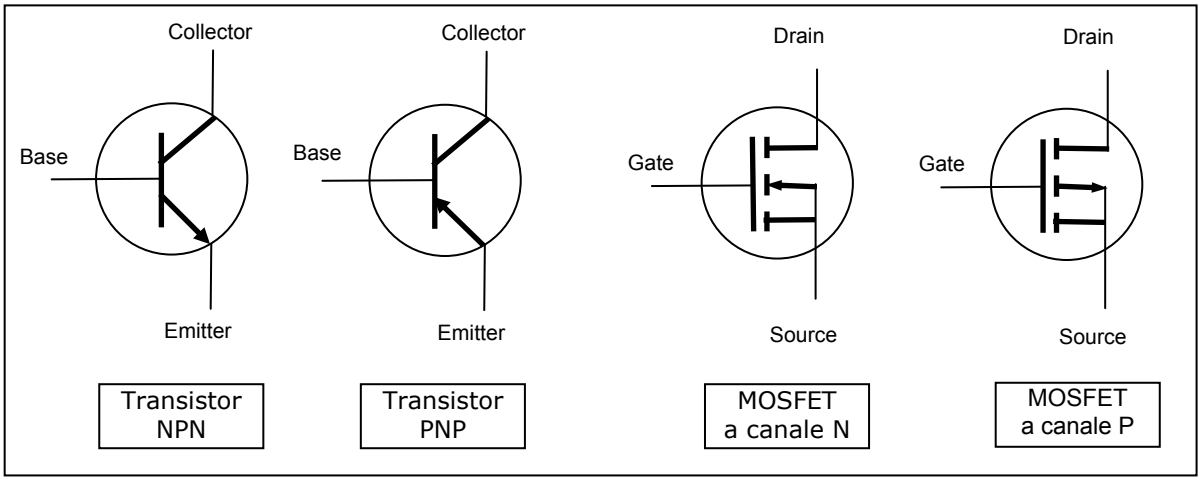

The TRANSISTOR macro, supplied with the sw VIVA, checks the functionality of the BJT and MOSFET components as electronic switch. The function "Transistor", supplied with the VIVA sw can be found in "Function & Macro data base" (Fig. 3-1), uses, in addition to the TRANSISTOR macro, the two macros: DIODE and DIODE_2 to check the junctions Base-Collector and Base-Emitter.
To execute all checks, the main parameters are those related to the functionality of the component to be verified and to the internal system points (channels) where are connected the pins of the component to be tested. The optional parameters are those related to the mode by which the macro executes measurements.

Below you will find a synthetic description of the macro parameters, describing the main parameters first and then the optional parameters.

TRANSISTOR (Technology, ValueOFF, ValueON, Emitter_Source, Base_Gate, Collector_Drain, GuardBase, GuardCollector, Wire, Quality, TestMode, TestResult, MeasureType, Recycle, Time, Volt_C_D, Current_C_D, ResPar_C_D, CapPar_C_D, Volt_B_G, Current_B_G, ResPar_B_G, CapPar_B_G)

Main parameters

Emitter_Source: [0-N]
Indicates the channel connected to pin1 of the component, which identifies the terminal Emitter or Source depending on the fact whether the component is a BJT or MOSFET kind. The parameter is expressed as a whole number, with possible values included in the interval: 0-N. If "Emitter_Source" is = 0 the macro is not executed.

Base_Gate: [0-N]
Indicates the channel connected to pin2 of the component, which identifies the terminal Base o Gate depending on the fact whether the component is a BJT or MOSFET kind. The parameter is expressed as a whole number, with possible values included in the internal: 0-N. If "Base_Gate" is= 0 the macro is not executed.

Collector_Drain: [0-N]
Indicates the channel connected to pin1 of the component, which identifies the terminal Collector or Drain depending on the fact whether the component is a BJT or MOSFET kind. The parameter is expressed as a whole number, with possible values included in the interval: 0-N. If "Collector_Drain" is = 0 the macro is not executed.

Optional parameters

Technology: [Auto|BJT NPN|BJT PNP|MOS N|MOS P]
Indicates the kind of component to be checked. This parameter can have one of the following values:

Auto	*The kind of component is not defined. During program execution the VIVA software will determine the kind of component to be verified.*
BJT NPN	*The component to be checked is a BJT transistor of the **NPN** kind.*
BJT PNP	*The component to be checked is a BJT transistor of the **PNP** kind.*
MOS N	*The component to be checked is a MOSFET transistor with N kind channel.*
MOS P	*The component to be checked is a MOSFET transistor with P kind channel*

ValueOFF: [0-100 Volt]
*Indicates the voltage value existing on "Collector/Drain" terminal when the component is in the interdiction status,(i.e. working as an open switch The parameter is expressed in Volt, with possible values included in the internal: 0-100 .This value should be lower than the "Volt_C_D"value , which indicates the voltage value of the generator connected to the "Collector/Drain" terminal. If in "Function & Macro data base", (*Fig. 3-1*), no default value is set for this parameter, the value is calculated at run time equal to: 0.75*"Volt_C_D"*

ValueON: [0-100 Volt]
*Indicates the voltage value present on the terminal "Collector/Drain" when the component is in the saturation status, i.e. working as a closed switch. The parameter is expressed in Volt, with possible values included in the interval: 0-100. This value should be lower than "Volt_C_D" value, which indicates the voltage value of the generator connected to the "Collector/Drain" terminal. If in "Function & Macro data base", (*Fig. 3-1*), no default value is set for this parameter, the value is calculated at run time and corresponds to 0.25*"Volt_C_D"*

GuardBase: [List of numbers included in the interval: 0-N]
Indicates the channels connected to the UUT points that, through the "Guarding Generator" use the "Active Guarding" technique, to insulate electrically the pin 2 (terminal "Base") of the component under test to execute the measurements. The possible values for this parameter are included in the interval: 0-N. If "GuardBase" is = 0, no channel is in use .

GuardCollector: [List of numbers included in the interval: 0-N]
Indicates the channels connected to the UUT points that, through the "Guarding Generator" use the "Active Guarding technique", to insulate electrically the pin 3 (terminal "Collector") of the component under test to execute the measurement. The possible values for this parameter are included in the interval: 0-N. If "GuardCollector" is = 0, no channel is in use.

Wire: [Auto|2 WIRE|3 WIRE]
Indicates the number of wires (or channels) in use for the measurement. The parameter can have one of the following values:

Auto	*The number of wires used is not defined. During the program execution, the VIVA sw will determine the suitable number of wires needed for the measurement.*
2 WIRE	*A 2 wire measurement is executed: the meter is connected to the same channels used for the generator.*
3 WIRE	*A 3 wire measurement is executed. It is the same as the 2 wire, with a third wire used for the guarding.*

Quality: [0-100%]
This parameter indicates measurement quality degree. For further information, see: ***Quality*** *in chapter 2.1 "Parameters with common meaning to several system macros".*

TestMode: [ON|OFF|ON-OFF]
Indicates the kind of test executed on the component. The parameter can have one of the following values:

ON	*It tests the capacity of the component to pass to the saturation status, i.e. to operate as a closed circuit.*
OFF	*it tests the capacity of the component to pass to the interdiction status, i.e. to operate as an open circuit.*
ON-OFF	*It tests the capacity of the component to be in the saturation and in the interdiction status.*

TestResult: [Test Result|Force Pass|Force Fail|Force Skip]
This parameter determines the kind of result you can obtain by executing the macro. For further information, see: ***TestResult*** *in chapter 2.1 "Parameters with common meaning to several system macros".*

MeasureType: [Normal|Average|RecOnError|Maximum|Minimum|Peak ToPeak]
This parameter defines the kind of elaborations that the macro will perform on the executed measurements. For further information, see: ***MeasureType*** *in chapter 2.1 "Parameters with common meaning to several system macros".*

Recycle: [0-1.000.000]
Indicates the number of times that a measurement must be executed. For further information, see: ***Recycle*** *in chapter 2.1 "Parameters with common meaning to several system macros".*

Time: [0-1 sec]
The parameter indicates measurement time; the possible values are included in the interval: 0-1 and it is expressed in seconds. If "Time" is = 0 the measurement time is not defined at the macro level but at the lower level. ("Drivers" and "DSP environment" for internal instruments management). See Fig. 1-1.

Volt_C_D: [0 -100 Volt]
Indicates the voltage value applied to pin 3 (terminal "Collector/Drain") of the component under measurement. The possible values for this parameter are included in the interval: 0-100, and it is expressed in Volt.

Current_C_D: [0-0,5 A]
Indicates the value of the current injected to pin 3 (terminal "Collector/Drain") of the component under measurement. The parameter is expressed in A, with possible values included in the interval: 0-0,5.

Volt_B_G: [0 -100 Volt]
Indicates the voltage value applied to pin 2 (terminal "Base/Gate") of the component under measurement. The parameter is expressed in Volt, with possible values included in the interval: 0-100,

Current_B_G: [0-0,5 A]
Indicates the value of the current injected to pin 2 (terminal "Base/Gate") of the component under measurement. The parameter is expressed in A, with possible values included in the interval: 0-0,5.

ResPar_C_D: [0-100.000.000 Ohm]
Indicates the resistive value in parallel to pin 3 (terminal "Collector/Drain") of the component under measurement. The parameter is expressed in Ohm, with possible values included in the interval: 0-100.000.000. The VIVA software determines the value of this parameter when creating the program or when it is executed in the "Autodebug" or "Autolearn" mode. The parameter can be set manually from the Debug Environment.

CapPar_C_D: [0-1 Farad]
Indicates the capacitive value in parallel to pin 3 (terminal "Collector/Drain") of the component under measurement. The parameter is expressed in Farad, with possible values included in the interval: 0-1. The VIVA software determines the value of this parameter when creating the program, or when it is executed in the "Autodebug" or "Autolearn" mode. The parameter can be set manually from the Debug Environment.

ResPar_B_G: [0-100.000.000 Ohm]
Indicates the resistive value in parallel to pin 2 (terminal "Base/Gate") of the component under measurement. The parameter is expressed in Farad, with possible values included in the interval: 0-100.000.000. The VIVA software determines the value of this parameter when creating the program or when it is executed in the "Autodebug" or "Autolearn" mode. The parameter can be set manually from the Debug Environment.

CapPar_B_G: [0-1 Farad]
Indicates the capacitive value in parallel to pin 2 (terminal "Base/Gate") of the component under measurement. It is expressed in Farad, with possible values included in the interval: 0-1. The VIVA software determines the value of this parameter when creating the program or when it is executed in the "Autodebug" or "Autolearn" mode. The parameter can be set manually from the Debug Environment.

2.12 FNODE

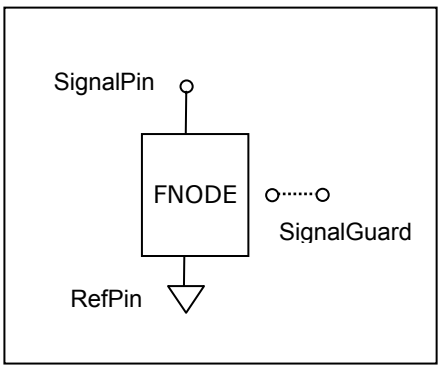

The FNODE macro is used to check the behavior of the polygonals, associated to a signal and connected to one or more UUT nodes, considered as an **electric bipole**. The bipole is a complex network (whose composition is ignored) accessible only by a couple of clamps, important exclusively for its external behavior (portrayal to external effects).

The bipole checked with the FNODE macro, is a bipole with a terminal powered with a sinusoidal voltage and the other terminal connected to ground (GND). The check on the bipole considers the behavior of the absorbed current measuring the value and the phase, in relation to the applied voltage. The FNODE macro executes harmonic analysis checks using the FFT available on the measurement device described in [1].

Before describing the meaning of the FNODE macro parameters, we recall some concepts related to the electric bipole behavior, that can support the comprehension of the results obtained depending on the values assigned to the FNODE macro parameters

Notes on electric bipoles

A bipole, made up by resistors, capacitors, constant inductances, somehow connected, powered by a high range and frequency sinusoidal voltage generator, absorbs a sinusoidal current with the same frequency as the voltage applies, with width and phase depending from the components values.

The expressions (1), (2) and (3) describe the links between the resistive, inductive and capacitive components of a bipole impedance depending on the applied frequency. The absorbed current module (I_{AC}) and the displacement (ϑ) with respect to the voltage, depend on the bipole impedance and its components: resistive, inductive and capacitive.

The ratio between the AC voltage applied and the absorbed current represents the bipole impedance (Z).

(1) $$\frac{V_{AC}}{I_{AC}} = Z = R + JX = R + J(X_L - X_C) = R + J(2\pi fL - \frac{1}{2\pi fC})$$

(2) $Z = \sqrt{R^2 + X^2}$ it is the impedance module and corresponds to the ratio of the effective tension and current values

(3) $\vartheta = arctg(\frac{X}{R})$ It is the impedance argument and corresponds to the displacement between the voltage applied to the bipole and the absorbed current

With:

V_{AC}	Voltage applied to the bipole, in Volt.
I_{AC}	Current absorbed by the bipole, in Ampere.
f	Applied voltage Frequency, in Hertz.
R	Bipole resistive component value, in Ohm.
L	Bipole inductive component value, in Henry.
C	Bipole capacitive component value, in Ohm
X	Bipole global reactance value, in Ohm.
X_L	Bipole inductive reactance value, in Ohm.
X_C	Bipole capacitive reactance value, in Ohm.
Z	Impedance module, in Ohm.
ϑ	Impedance argument, in radiants.

Considering the expressions (1), (2) and (3), to understand better the bipole behavior depending on the values of the FNODE macro parameters, we cam assume the following:.

- Increasing the frequency increases the impedance inductive component and decreases the impedance capacitive component; so current delays in relation to the voltage.
- Decreasing the frequency, increases the impedance capacitive component and decreases the impedance indicative component; so current delays in relation to the voltage.
- It exists a frequency for which the inductive component is equivalent to the capacitive component. In this case, the impedance is only resistive and the absorbed current is phased with the applied voltage
- X=0 Resistive impedance: current in phase with voltage.
- X>0 Inductive impedance: current delayed in relation to voltage.
- X<0 capacitive impedance: current in advance in relation to the voltage.

The charts reproduced in Fig. 2-1, reproduce the voltage and current trend in dipoles: resistive only, capacitive only, Inductive only and mixed. Actually, bipoles are always of the mixed or resistive kind.

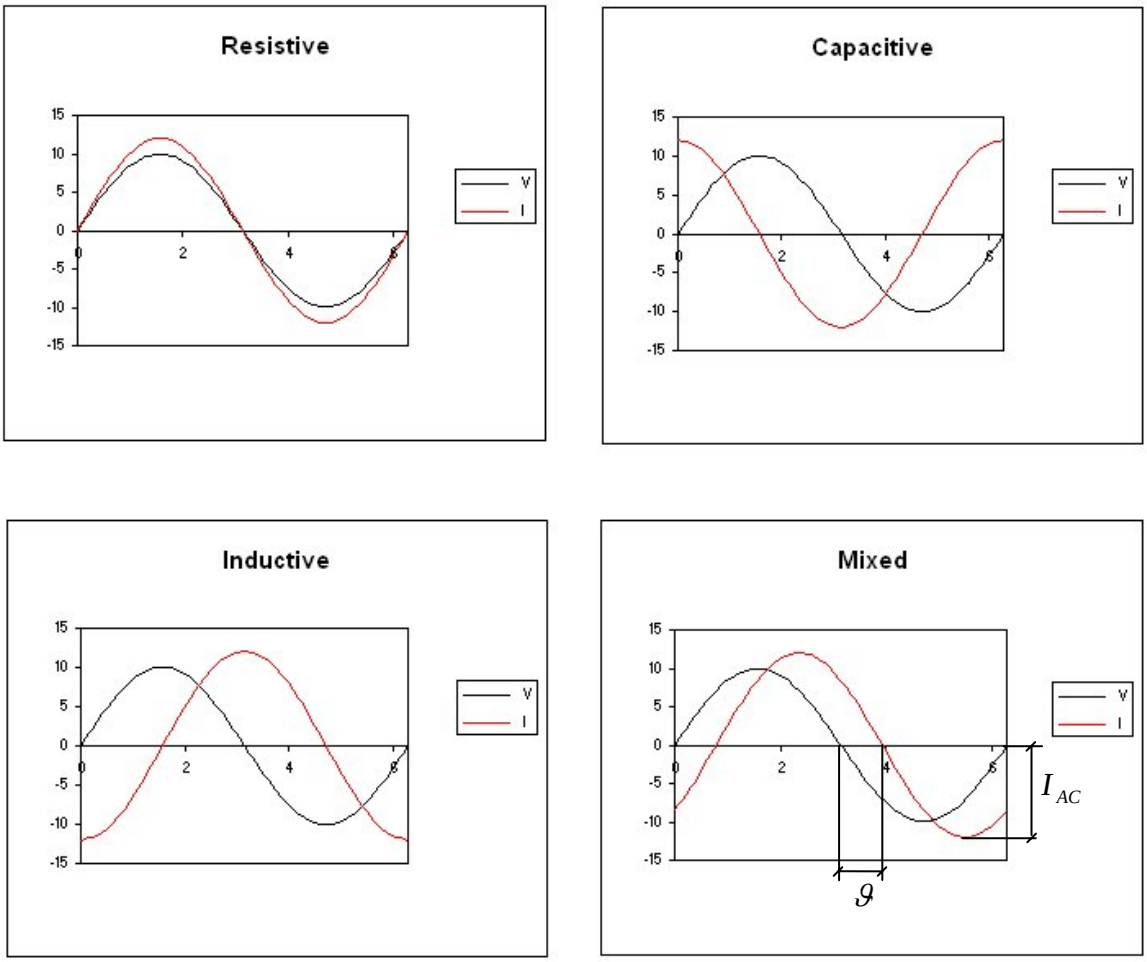

Fig. 2-1 - VIVA: Voltage and Current on a bipole

The function "Fan", provided with the VIVA Software, that can be found in "Function & Macro data base" (Fig. 3-1), uses the FNODE macro to check the functionality of bipoles existing on the UUT (represented by the signals located on the UUT). As indicated in chapter 3.2 (Functions in Programming Environment), the section "Patterns" for the function "Fan" is empty, to indicate that the "Fan" function is not associated to components or devices, listed in "Board CAD data base" (Fig. 3-1).

The choice of executing the function "Fan" on UUT signals is made during the "Create Program" phase, selecting the value: "Fnode" for the "OTPN:" field, in the dialogue "Advanced Create Program Settings".

The FNODE macro does not contain into the parameters list the values of current and phase that must be checked. In relation to these values it is possible to find the accepted positive and negative tolerances in relation to the expected values. The expected values can be acquired by executing the program on golden boards in the "Autodebug" or "Autolearn". The acquired values will be recorded in the program data base to be used in the "Normal" and "Test" boards to check the produced boards

To execute the checks, the main parameters are those related to the functionality of the component to be checked and to the system internal points (channels) where are connected the pins of the component under test. The optional parameters are those related to the modes by which the macro executes the measurements.

Here below you will find a synthetic description of the macro parameters, describing the main parameters first and then the optional parameters.

FNODE **(TolPosI, TolNegI, TolPosPha, TolNegPha, SignalPin, RefPin, SignalGuard, Wire, Quality, TestResult, MeasureType, Recycle, Volt, PointWF, BurstNr, StartFreq, StopFreq, SettlingWave, Scale, ViewMode, ScopeMode, ViewWFNumber, ScopeMode, SelectView)**

Main parameters

TolPosI: [0-100%]
Indicates the maximum positive tolerance accepted when measuring the value of current circulating in the bipole. The parameter is expressed as a percentage, with possible values included in the interval: 0-100.

TolNegI: [0-100%]
Indicates the maximum negative tolerance accepted when measuring the value of current circulating in the bipole. The parameter is expressed as a percentage, with possible values included in the interval: 0-100.

TolPosPha:[0-100%]
Indicates the maximum positive tolerance accepted in the measure of the displacement angle between applied voltage and current circulating in the bipole. The parameter is expressed as a percentage, with possible values included in the interval: 0-100.

TolNegPha: [0-100%]
Indicates the maximum negative tolerance accepted in the measure of the displacement angle between applied voltage and current circulating in the bipole. The parameter is expressed as a percentage, with possible values included in the interval: 0-100.

SignalPin: [List of numbers, included in the interval 0-N]
Indicates the channels connected to the bipole active terminal. The parameter is expressed as a whole number, with possible values included in the interval:0-N. If "SignalPin" is= 0 the macro is not executed

RefPin: [List of numbers, included in the interval 0-N]
Indicates the channels connected to the bipole reference terminal, with possible values included in the interval:0-N. If "RefPin" is= 0 the macro is not executed

Optional parameters

SignalGuard: ***[*List of numbers, included in the interval 0-N*]***
Indicates the channels connected to the points of the UUT that, through the "Guarding Generator" allow to insulate electrically the bipole under test to execute the measurement. The possible values are included in the interval: 0-N. If "SignalGuard" is= 0, no channel is in use

Wire: ***[Auto|2 WIRE|3 WIRE]***
Indicates the number of wires (or channels) in use for the measurement. The parameter can have one of the following values:

Auto	*The number of wires in use is not specified. During the program execution the VIVA software will determine the suitable numbers of wires to be used for the measurement.*
2 WIRE	*A 2 wire measurement is performed ; the meter is connected to the same channels used by the generator.*
3 WIRE	*A 3 wire measurement is performed. The measurement is the same as the 2 wire with a third wire used for the guarding.*

Quality: ***[0-100%]***
This parameter indicates measurement quality degree. For further information, see: ***Quality*** *in chapter 2.1 "Parameters with common meaning to several system macros".*

TestResult: ***[Test Result|Force Pass|Force Fail|Force Skip]***
This parameter determines the kind of result you can obtain by executing the macro. For further information, see: ***TestResult*** *in chapter 2.1 "Parameters with common meaning to several system macros".*

MeasureType: ***[Normal|Average|RecOnError|Maximum|Minimum|Peak ToPeak]***
This parameter defines the kind of elaborations that the macro will perform on the executed measurements. For further information, see: ***MeasureType*** *in chapter 2.1 "Parameters with common meaning to several system macros".*

Recycle: ***[0-1.000.000]***
Indicates the number of times that a measurement must be executed. For further information, see: ***Recycle*** *in chapter 2.1 "Parameters with common meaning to several system macros".*

Volt: [0 -100 Volt]
Indicates the voltage value applied to the bipole active terminal under measurement. The possible values of this parameter are included in the interval: 0-100, expressed in Volt. The value indicates the semi wave maximum module, not the peak to peak value.

PointWF: ***[2-1024]***
Indicates the number of digital samples used to sample the analog signal acquired by the current meter used for the measurement. The possible values for this parameter are included in the interval: ***2-1024.***

BurstNR: ***[1-108]***
Indicates the number of bursts emitted by the voltage generator, where burst is the emission of a signal at a fixed frequency. If "BurstNR"> 1, then the number of burst emitted coincides with the number indicated in "BurstNR", starting from the indicated frequency (in the parameter "StartFreq") and increasing the signal frequency value as indicated by the parameter "Scale". The latter can show the values: "Lin" or "Log" to indicate linear or logarithmic increase.
The value of this parameter can be modified by the operator for debug activities. Executing the program in the "Autolearn" or "AutoDebug" mode, to create the values to be recorded in the board data base (used in the testing mode"Normal") resets this parameter. The assigned value depends on the kind of optimization scheduled. For the VIVA software current release, the scheduled optimization is that to define the number of bursts applied to optimize the time for program execution

StartFreq: [1-100.000 Hertz]
Indicates the frequency of the first burst sent to the bipole active terminal. If the value "StartFreq" coincides with "StopFreq", a single burst is sent to the positive terminal of the bipole, regardless of the value assigned to "BurstN". For this parameter, as for, "BurstNR", possible modifications applied during the debug activities, are reset when executing the program in "Autolearn" or "Autodebug" modes.

StopFreq: 1-1.025.000 Hertz]
Indicates the frequency of the last burst sent to the bipole active terminal. If the value "StopFreq" coincides with "StarFreq", a single burst in sent to the bipole positive terminal, regardless of the value assigned to parameter "BurstN". For this parameter, as for "BurstNR", possible modifications applied during the debug activities, are reset when the program is executed in the autodebug or autolearn mode.

SettlingWave: [0-100]
This parameter allows to change the delay time before acquiring sample measurements. It is expressed as a whole number, with possible values included in the interval: 0-100. Normally, after stimulating the component under measurement, a delay time is required before starting measurements, to exit from the initial temporary regimes due to the existence of parasitic capacities and inductances of the module containing the measure instruments and of the UUT. If we increase the "SettlingWave" value, the delay time increases and the measurement accuracy is improved; of course, the time needed to execute the measurements increases as well.

Scale: [Lin|Log]
Indicates the mode by which the applied signal frequency value is increased to emit more bursts.
The parameter can have one of the following values

Lin *The frequency of the subsequent burst is calculated by summing the frequency value of the current burst the coefficient determined by the following formula::* $\frac{"StopFreq"-"StartFreq"}{"BurstNR"}$.

Log *The frequency of the subsequent burst is calculated multiplying the value of the current burst for the coefficient determined by the formula:* $\left(\frac{"StopFreq"}{"StartFreq"}\right)^{\frac{1}{("BurstN"-1)}}$.

ViewMode: [Current|Phase|CapPar|ResPar|IndPar|CapSer|ResSer|IndSer]

Defines the kind of scale displayed on the digital-analog indicator shown in the page "Program". The scales "Current" and "Phase", that allow to characterize the bipole impedance, include either the main elements (R,C or L) and the parasitic components existing in the circuit. In addition to the scales "Current" and "Phase", the FNODE macro allows to view the value of model components, serial or parallel of the circuit, equivalent to the bipole. These components are those that can be measured with the modern Impedance Measurements or "LCR meter". If necessary, for a detailed explanation on these components of the equivalent circuit, refer to the instruments quoted above and to the impedance measurement theory. These components (R, C or L) can be in parallel or in series. The FNODE macro displays the values of these components (R_p, R_s, C_p, C_s, L_p, o L_s). The parameter can have one of the following values:

Current *Displays the maximum value of the current module acquired during the measurement.*

Phase *Displays the displacement value between the voltage applied to the bipole and the measured current.*

CapPar *Displays the capacitive parallel value of the circuit equivalent to the bipole calculated with the expression:* $Cp = \frac{I * Sin(\vartheta)}{2\pi f * V}$.

ResPar *Displays the resistive parallel value of the circuit equivalent to the bipole calculated with the expression:* $R_p = \frac{V}{I * Cos(\vartheta)}$.

IndPar *Indicates the parallel inductance value of the circuit equivalent to the bipole calculated with the expression:* $L_p = \frac{V}{2\pi f * I * (-Sin(\vartheta))}$.

CapSer *Displays the capacitive serial value of the circuit equivalent to the bipole calculated with the expression:* $C_s = \frac{I}{2\pi f * V * Sin(\vartheta)}$.

ResSer *Displays the resistive serial value of the circuit equivalent to the bipole calculated with the expression:* $R_s = \frac{V * Cos(\vartheta)}{I}$.

IndSer *Displays the inductive serial value of the circuit equivalent to the bipole calculated with the expression:* $L_s = \frac{V * (-Sin(\vartheta))}{2\pi f * I}$.

If we assign to "ViewMode" the values: "Phase", "CapPar","ResPar", "IndPar", "CapSer", "ResSer" and "IndSer", the displayed values are those of the signal whose frequency (or burst) is the one for which the maximum value of the current module has been measured.

ScopeMode: [Time|FFT|I Module|I Phase]

Defines the kind of scale represented in the chart displayed in the page "Oscilloscope", selectable in the Debug Environment. The parameter can have one of the following values:

Time *The scale represented on the x-axis of the chart is the time and on the y-axis we find the measured signal value. The chart represents both the measured current and the applied voltage.*

FFT *The scale represented on the x-axis of the chart is the number of bursts, defined with the parameter "BurstNR". The scale represented on the y-axis is the average value of the signal, the fundamental module and the subsequent harmonics of the measured current and the applied voltage.*

I Module *The scale represented on the x-axis is the number of bursts, defined with the parameter "BurstNR". The scale represented on the y axis is the current module of the fundamentals of the several bursts of the measured signal.*

I Phase *The scale represented on the x-axis is the number of bursts, defined with the parameter "BurstNR". The scale represented on the y-axis is the value of displacement of the fundamentals of several bursts of the measured signal.*

For the views defined with "I Module" and "I Phase" are displayed also the values corresponding to the positive and negative tolerances defined for the measured scales. (Parameters: "TolPosI", "TolNegI", "TolPosPha" and "TolNegPha"). The trend, when modifying the frequency, the current module and the phase, represents the "Bode Diagram", which characterized the bipole frequency output".

The number of bursts displayed in the page "Oscilloscope" is defined by the value assigned to parameter "ViewFnumber".

ViewFNumber: [-1- BurstNR]
Indicates the number of bursts (hence the frequency of the applied signal) whose values are displayed on the digital-analog indicator shown in the page "Program", as defined by the parameter "ViewMode". The parameter can have one of the values included in the interval: -1- BurstNR. The value of this parameter also influences the number of bursts viewed in the page "Oscilloscope". In particular:

ViewFNumber = -1	*Displays data related to all frequency bursts emitted*
ViewFNumber = 0	*Displays data related to all frequency bursts emitted.*
ViewFNumber = 1	*Displays data related to the first frequency burst emitted.*
ViewFNumber = 2	*Displays data related to the second frequency burst emitted*
ViewFNumber = 3	*Displays data related to the third frequency burst emitted*

Etc…

***SelectView:* [Default|ViewMode|Resistor|Capacitor|Inductor|DirectJunction|InvertJunction|]**
Defines the kind of scale displayed on the digital-analog indicator shown in the page "Program", in alternative to the choice indicated by the parameter "ViewMode". It can have one of the following values:

Default	*Displays the scale defined with: "ViewMode".*
ViewMode	*Displays the scale defined with: "ViewMode".*
Resistor	*Displays the resistive value of the bipole equivalent*
Capacitor	*Displays the capacitive value of the bipole equivalent.*
Inductor	*The scale displayed is the value of the equivalent inductance of the bipole.*
DirectJunction	*Checks the existence of a directly polarized junction The current must flow in the junction The displayed scale is the voltage value measured considering the bipole as a directly polarized junction.*
InvertJunction	*Checks the existence of an inverted polarized junction. Current must not flow into the junction. The scale displayed is the voltage value measured considering the bipole as an inverted polarized junction*

The scales displayed with values other than "ViewMode" or "Default" can be selected only if with the button "View MEMO Parameters" (page "Macro View") we have set to "Y" the task "Enable" for the options: "Capacitor", "Inductor", "JunctionDir", "JunctionInv" and "Resistor" As for "BurtstNR", the changes made through the "View MEMO Parameters" button are active only during the debug phase. Executing the program in the "Autolearn" or "Autodebug" mode, resets the options that have been modified

2.12.1 FNODE macro optimizations

As mentioned, the choice to execute the FNODE macro on UUT signals is made in the "Create Program", phase by selecting value: "Fnode" for field "OTPN:", available in the dialog "Advanced Create Program Settings".

It is then possible to define the kind of optimization applied when executing the test

The option "One Touch per Net/Fnode optimization", in the Debug Environment, (to activate it, place the mouse cursor on section "FNODE", Fig. 2-3, and right click with the mouse button).

It is important to consider that the optimizations are executed only after the debugging of the single tests that make up the program.

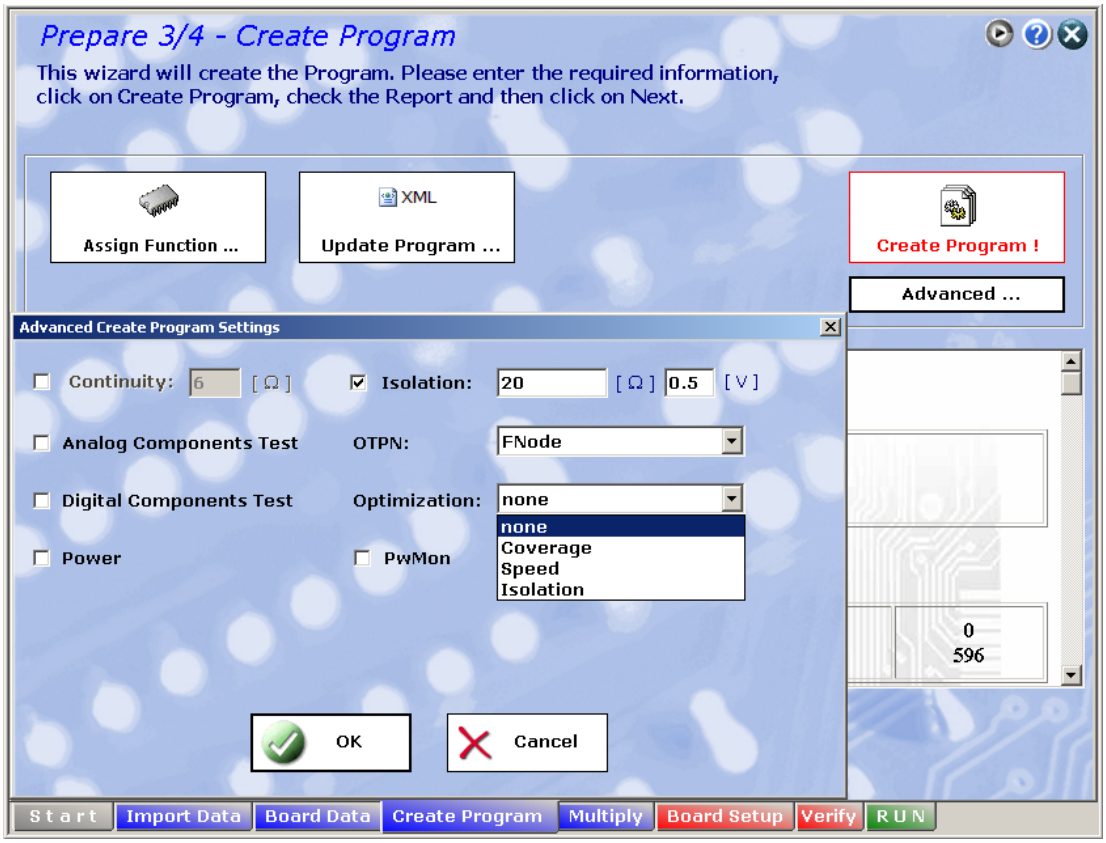

Fig. 2-2 - VIVA: "Advanced Create Program Settings"

The kind of optimization selected determines the change in percentage on the tolerances applied to checked current and phase values, with reference to the values set in the FNODE macro for the signal. (Parameters: TolPosI, TolNegI, TolPosPha and TolNegPha).
According to the settings defined in the field "Optimization:" run time the tolerance parameters will be modified as follows:

none The tolerance values applied run time correspond to those defined in the FNODE macro settings.
Isolation The tolerance values applied run time are 20% lower than those defined in the FNODE macro settings.
Coverage The tolerance values applied run time are 25% lower than those defined in the FNODE macro settings.
Speed The tolerance values applied run time are 30% lower than those defined in the FNODE macro settings.

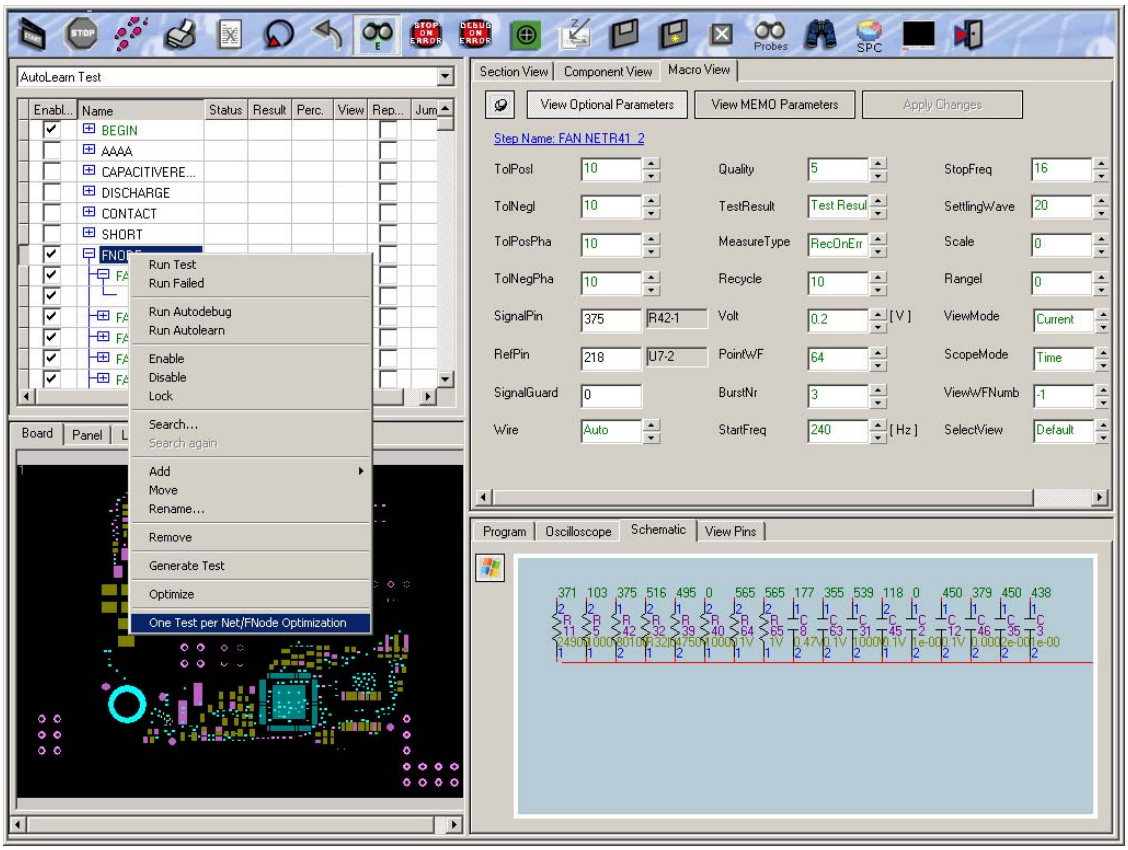

Fig. 2-3 - VIVA: Choosing Fnode Optimization

In pages "VERIFY" and "RUN" of the Wizard Environment, the button Advanced Settings ... allows to define execution modes which interact with the FNODE macro execution.
The dialog "Advanced Test Settings" allows to define the following settings:

Runtime Short generation (default condition: enabled) enables insulation checks generation runtime when one or more executions of the FNODE macro output a "FAIL" result and in section ISOLATION the insulation test is not available for the NET. (insulation checks not available in section ISOLATION generated according to parameter "Clearance" available in the dialog "Advanced import Data Settings").

Show FNode Details (default condition: disabled) this parameter enables the display of errors when the FNODE macro outputs a "FAIL" result and one of the optimization modes has been selected for the FNODE macro (Isolation, Coverage, Speed). An error detected when executing the FNODE macro might be irrelevant, since the error in the FNODE macro may be used only to check insulation on faulty R/L/C components.

ISO R/L/C Series (default condition: disabled) this parameter enables the check of insulation between Pin-1 and Pin-2 of Resistive (R), Inductive (L) and Capacitive (C) components. The check selected with this parameter does not depend on the FNODE macro, but only on the features of the components existing on the UUT. The check is executed for:

- All the resistive components having a value included between the resistive value used to create the insulation tests (field "Isolation" in "Advanced Create Program Settings" dialog) and 100 Ohm.
- All the capacitive components having a capacitive value higher than 100 nF.

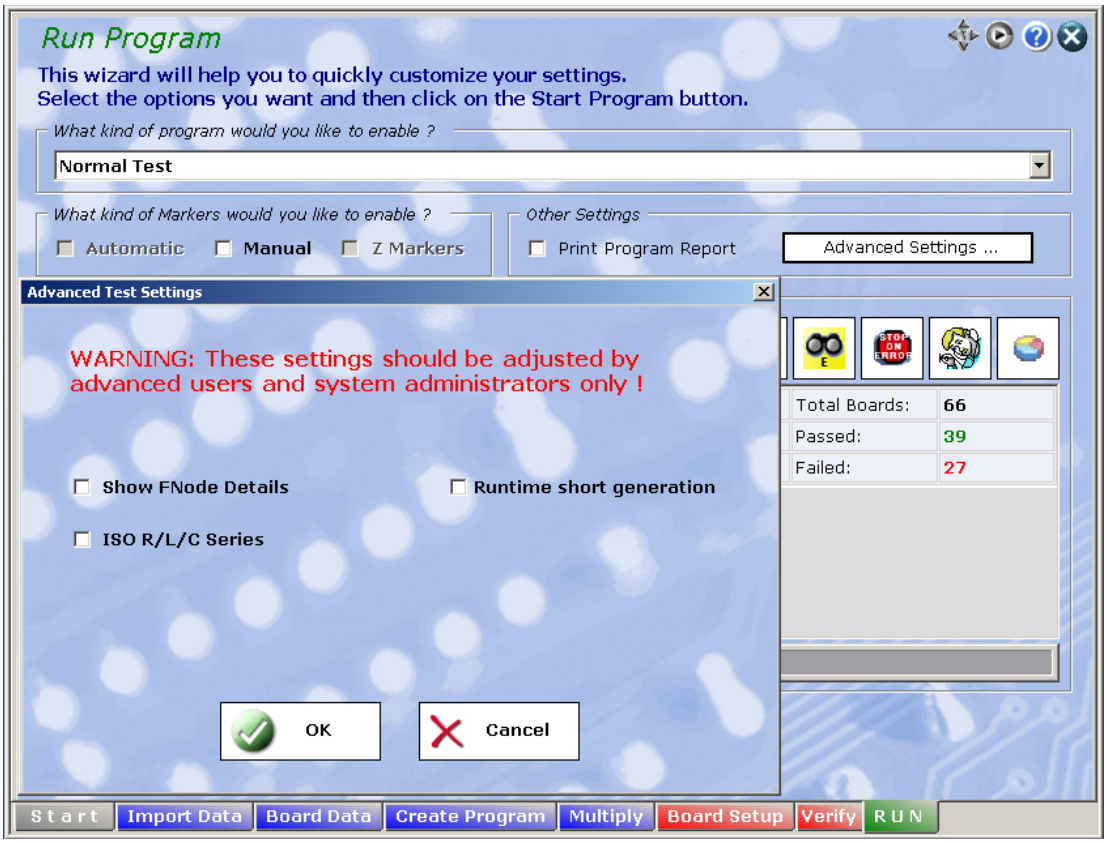

Fig. 2-4 - VIVA: Advanced Test Settings

The Tab. 2-1, shows a summary of the tests executed on the ground of the selected optimizations.

Tab. 2-1 - VIVA: Executed Tests and Optimization

Optimizations / Tests	none	Isolation	Coverage	Speed
FNODE	×	×	×	×
ISOLATION	×	□ ◆	□ ◆	□ ◆
R/L/C	×	×	O ◆	◆
ISO R/L/C Series	×	●	●	×
DIODE	×	×	×	×
Other tests	×	×	×	×

Legend:

× Tests always enabled
◆ Test enabled runtime in case of FNODE errors.
● Test enabled runtime, id "ISO R/L/C Series" is selected in the "Advanced Test Settings" dialog
O Test enabled only for R/L/C kind components not connected to the nodes taken as reference pins for FNODE macro, (always when "One Touch per Net/Fnode optimization" is selected).
□ Test enabled among "GND" and "VCC" kind signals.

2.13 JUMPER

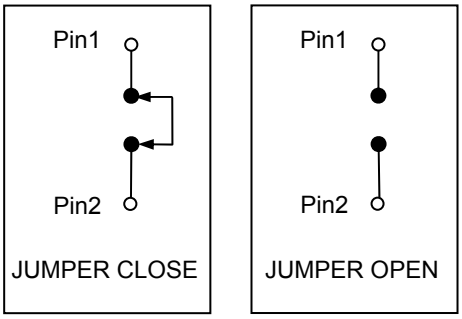

The JUMPER macro is used to check the jumper-kind components present on the UUT. The jumpers are small metal devices, used to short-circuit the contacts (pin) located in predetermined points of a digital circuit, to activate or deactivate different circuit functions scheduled in the UUT design phase. According to the presence or lack of the short-circuit the jumper is considered as CLOSE or OPEN. The JUMPER macro is an example of macro written with the VNL language (VIVA Native Language).

To execute the checks, the main parameters are those related to the component functionality to be checked and to the internal system points (channels) where the component pins to be tested are connected. The optional parameters are those related to the mode by which the macro executes the measurements

Below, a synthetic description of the macro parameters, describing the main parameters first and then the optional parameters.

JUMPER **(Mode, Value, Pin1, Pin2, TestResult, MeasureType, Recycle, Time, Volt, CapPar)**

Main parameters

Mode: [CLOSE|OPEN]
Indicates the measurement mode, that is: whether it is checked the closed jumper functionality or the open jumper functionality. The parameter can have one of the following values

CLOSE Checks that the jumper is in the closed status, where "closed" indicates a resistive value between "Pin1" and "Pin2" lower than the value defined with "Value".

OPEN Checks that the jumper is in the "open" status, where open means a resistive value between "Pin1" and "Pin2" above the value defined with parameter "Value".

Pin1: [0-N]
Indicates the channel connected to the positive terminal of the component to be measured, where positive is the pole connected to the generator which stimulates the component by injecting current or applying voltage. The parameter is expressed as a whole number, with possible values included in the interval: 0-N. If "Pin1" is = 0, the macro is not executed.

Pin2: [0-N]
Indicates the channel connected to the negative terminal of the component to be measured, where negative is the terminal opposite to the positive terminal of the component to be measured. The parameter is expressed as a whole number, with possible values included in the interval: 0-N. If "Pin2" is=0 the macro is not executed

Optional Parameters

Value: [0 -10000000 Ohm]
Indicates the expected resistive value between the two points indicated with "Pin1"and "Pin2". The parameter is expressed in Ohm, with possible values included in the interval: 0-10000000. If the parameter is "0" the resistive value used is the one set in the dialogue: "Advanced Create Program Settings" to check continuity and insulation. In particular:

- *To check a closed jumper the value used is the one set in the domain "Continuity" (Ω) of the "Advanced Create Program Settings" dialogue.*
- *To check an open jumper the value used is the one set in the domain "Isolation" (Ω) of the "Advanced Create Program Settings" dialogue.*

TestResult: [Test Result|Force Pass|Force Fail|Force Skip]
Defines the kind of result obtained when executing the macro.
For further information about the parameter see: ***TestResult*** *in chapter 2.1 "Parameters with common meaning to several system macros.*

MeasureType: [Normal|Average|RecOnError|Maximum|Minimum|Peak ToPeak]
Defines the kind of elaboration made by the macro on executed measurements.
For further information about the parameter see: ***MeasureType*** *in chapter 2.1 "Parameters with common meaning to several system macros".*

Recycle: [0-1.000.000]
Indicates how many times the measurement is executed.
For further information about the parameter see: ***Recycle*** *in chapter 2.1 "Parameters with common meaning to several system macros".*

Time: [0-1 sec]
Indicates the measure time. The parameter can have one of the values included in the interval: 0-1 and is expressed in seconds. If "Time" is = 0 the measure time is not defined at the macro level but at a lower level. ("Drivers" and "DSP environment" for internal instruments management). See Fig. 1-1.

Volt: [0 -100 Volt]
*Indicates the voltage value applied to the positive terminal of the component under measurement. The possible values for this parameter are included in the interval: 0-100, and is expressed in Volt. . If the parameter is= 0", the value in use is the one set in the domain "Isolation" (*V*) of the "Advanced Create Program Settings" dialogue.*

CapPar: [0-1 Farad]
Indicates the capacitive parallel value to the resistance under measurement. The parameter is expressed in Farad, with possible values included in the interval: 0-1. The VIVA software determines the value of this parameter when generating the program or when the program is executed in the "Autodebug" or "Autolearn" modes. The value of the parameter can be modified manually from the Debug Environment.

2.14 FUSE

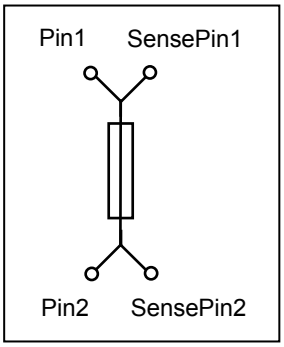

The macro FUSE is used to check the fuse kind components existing on the UUT. The **fuse** is a simple electric device able to protect from possible short-circuits, by interrupting the current flow if this exceeds a predetermined threshold. Fuses are made up by a glass or porcelain container, usually cylindrical, which contains a metal wire or strip which connects two contact terminals. The wire is dimensioned so that it melts (for the heat produced for joule effect) if the current exceeds a prescribed value.

The macro FUSE checks the fuse measuring the voltage drop at its pins when it is passed through by a current not higher than the nominal value of the current which characterizes the fuse. The macro FUSE is an example of macro written using the VNL (VIVA Native Language).

To execute the checks, the main parameters are related to the functionality of the component to be checked and to the internal points of the system (channels) where the pins of the component to be tested are connected. The optional parameters are related to the modes by which the macro executes measurements.

Here below, we give a synthetic description of the macro parameters, considering the main parameters first and then the optional parameters.

FUSE **(FuseCurrent, Value, TolPos, TolNeg, Pin1, Pin2, SensePin1, SensePin2, Wire, TestResult, MeasureType, Recycle, Time)**

Main Parameters

FuseCurrent: [0-100 Ampere]
Indicates the value of the fuse nominal current, i.e. the current which can go through the fuse in a continuative way without causing interruption. The current injected in the fuse depends on the value of this parameter and is calculated at run time during the macro execution. If the result determines a value lower than 0,01, the value used will be 0,01; if the result determines a value higher than 0,1, the value used will be 0,1.

Pin1: [0-N]
Indicates the channel connected to the positive terminal of the component under measurement, where positive is the pole connected to the generator which stimulates the component by injecting current or by applying voltage. The parameter is expressed as a whole number, with possible values included in the interval: 0-N. If "Pin1" is = 0, the macro is not executed.

Pin2: [0-N]
Indicates the channel connected to the negative terminal of the component under measurement, where negative is the terminal opposite to the positive terminal of the component under measurement. The parameter is expressed as a whole number, with possible values included in the interval: 0-N. If "Pin2" is= 0 the macro is not executed.

Optional parameters

Value: [0 -100 Volt]
Indicates the expected value of the voltage drop at the pins of the fuse. This value will depend on the current injected on the fuse, which, as indicated in the description of parameter "FuseCurrent", depends on the value defined with "FuseCurrent".

TolPos: [0-100%]
Indicates the maximum positive tolerance accepted in the component measurement. The parameter is expressed in %, with possible values included in the interval: 0-100.

TolNeg: [0-100%]
Indicates the maximum negative tolerance accepted in the component measurement. *The parameter is expressed as a percentage, with possible values included in the interval: 0-100.*

SensePin1: [0-N]
Indicates the channel connected to the positive terminal of the voltage meter, which, for 4 or 6-wire measurements is connected to the positive pole of the fuse to be measured. For 2 and 3-wire measurements, the voltage meter is connected internally to the generator which stimulates the component. The parameter is expressed as a whole number, with possible values included in the interval: 0-N. If "SensePin1" is= 0, no channel is in use.

SensePin2: [0-N]
Indicates the channel connected to the negative terminal of the voltage meter, which, for 4 or 6-wire measurement is connected to the negative pole of the fuse to be measured. For 2 and 3-wire measurements the voltage meter is connected internally to the generator which stimulates the component to be measured. The parameter is expressed as a whole number, with possible values included in the interval 0-N. If "SensePin2" is= 0, no channel is in use.

Wire: [Auto|2 WIRE|3 WIRE|4 WIRE|6 WIRE]
Indicates the number of wires (or channels) used for measurement.
For further details on this parameters, see ***Wire*** *in chapter 2.1 "Parameters with common meaning to several system macros".*

TestResult: [Test Result|Force Pass|Force Fail|Force Skip]
Defines the kind of result obtained when executing the macro.
For further details on this parameter, see ***TestResult*** *in chapter 2.1 "Parameters with common meaning to several system macros.*

MeasureType: [Normal|Average|RecOnError|Maximum|Minimum|Peak ToPeak]
Defines the kind of elaboration made by the macro on executed measurements.
For further details on this parameter, see ***MeasureType*** *in chapter 2.1 "Parameters with common meaning to several system macros".*

Recycle: [0-1.000.000]
Indicates how many times measurement is executed.
For further details on this parameter, see ***Recycle*** *in chapter 2.1 "Parameters with common meaning to several system macros".*

Time: [0-1 sec]
Indicates measurement time. The possible values of this parameter are included in the interval: 0-1 and it is expressed in seconds. If "Time" is = 0, the measurement time is not defined at the macro level but at a lower level. ("Drivers" and "DSP environment" for internal instruments management). See Fig. 1-1.

2.15 CRYSTAL

The CRYSTAL macro is used to check the oscillator kind components present on the UUT. The oscillator is an electronic component which behaves like a generator emitting a digital signal at a determined frequency. The frequency of the signal emitted is fixed and depends on the kind of component. The CRYSTAL macro checks that the frequency is the requested for the specific component and allows to execute the check both with a powered component and with the non powered component.

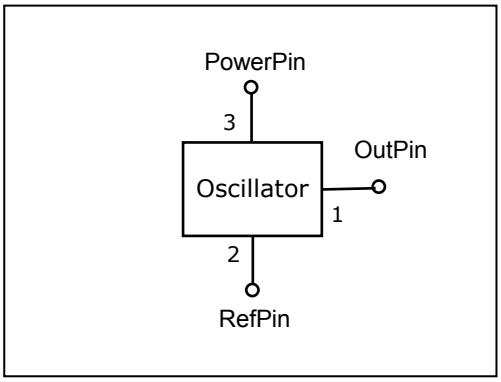

To execute the checks, the main parameters are those related to the functionality of the component to be checked and to the internal system points (channels) where the pins of the component to be tested are connected. The optional parameters are related to the modes by which the macro executes the measurements.

Below, a synthetic description of the macro parameters, depicting the main parameters first and then the optional parameters.

CRYSTAL **(Name, ModuleType, TolPos, TolNeg, RefPin, OutPin, ClusterName, Value, PowerSet, PowerPin, TestResult, MeasureType, Recycle, TriggerLevel, PwrVoltage, PwrCurrent, GateTime)**

Main Parameters

Name:
Indicates the name of the component to be tested. The component name is the first element of the couple identifying the node on the UUT: <ComponentName-PinNumber>. If the component is associated to a complex device, the parameter "Name" is "ComponentName#*i*", where *i* identifies the part "SUBi" of the complex device.

ModuleType: [NONE|VL|VBS|VL_DYNAMIC]
Identifies the kind of macro in use, i.e. the language used to develop the Macro. The possible values for this parameter are:

NONE	The macro in use is written in VIVA native language.
VL	The macro in use is written in VIVA Language (VL). The macro is executed in the static mode. This is the default value for the macro CRYSTAL.
VBS	The macro in use is written in Visual Basic Script. (VBS).
VL_DYNAMIC	The macro in use is written in VIVA Language Dynamic (VL_DYNAMIC). The macro is executed in the dynamic mode

TolPos: [0-100%]
Indicates the maximum positive tolerance accepted in the component measurement. The parameter is expressed as a percentage, with possible values included in the interval: 0-100.

TolNeg: [0-100%]
Indicates the maximum negative tolerance accepted in the component measurement. The parameter is expressed as a percentage, with possible values included in the interval: 0-100.

RefPin: [0-N]
Indicates the channel connected to the reference terminal of the component under measurement. The parameter is expressed as a whole number, with possible values included in the interval: 0-N. If "RefPin" is = 0, the macro is not executed.

OutPin: [0-N]
Indicates the channel connected to the output terminal of the component under measurement. On this channel is measured the frequency of the signal emitted by the component to check its correct operation. The parameter is expressed as a whole number, with possible values included in the interval: 0-N. If "OutPin" is = 0, the macro is not executed.

Optional Parameters

ClusterName: [String]
Indicates the name of the cluster used to encode0 the macro. In the VL environment, "cluster" indicates the code included between the two instructions START "ClusterName" " Cluster Parameters….; and ENDTEST;. For the CRYSTAL macro, the default value of this parameter is: "Crystal", which identifies the part of code developed in VL to check the oscillator components.

Value: [0 -10000000 Hz]
Indicates the expected frequency value for the signal emitted by the component, present on the channel identified with "OutPin".

PowerSet: [ON|OFF]
Defines whether the component must be powered before the checking. The possible values for this parameter are:

- ***ON*** *The component must be powered before the checking. This means that the macro POWER is executed before the checking, with parameter "PowerMode" = "ON" and with power supply supplying voltage to the whole UUT enabled to be powered on.*[5]
- ***OFF*** *The component is not powered before the checking. During the macro execution is used one of the generators available with the testing system measurement instruments.*

PowerPin: [0-N]
Indicates the channel connected to the power terminal of the component under measurement. This parameter is relevant if "PowerSet"="OFF" and is expressed as a whole number, with possible values included in the interval: 0-N. If "PowerPin" is= 0, the macro is not executed.

TestResult: [Test Result|Force Pass|Force Fail|Force Skip]
Defines the kind of result obtained when executing the macro.
For further details on this parameter, see ***TestResult*** *in chapter 2.1 "Parameters with common meaning to several system macros.*

MeasureType: [Normal|Average|RecOnError|Maximum|Minimum|Peak ToPeak]
Defines the kind of elaborations made by the macro on executed measurements.
For further details on this parameter, see ***MeasureType*** *in chapter 2.1 "Parameters with common meaning to several system macros".*

Recycle: [0-1.000.000]
Indicates how many times measurement is executed.
For further details on this parameter, see ***Recycle*** *in chapter 2.1 "Parameters with common meaning to several system macros*

TriggerLevel: [-100 -+100 Volt]
Indicates the voltage value where the frequency measurement of signal generated by the component is executed.

PowerVoltage: [0 -100 Volt] Generic number???? Unit: Number???
Indicates the voltage applied to the component through the channel identified with "PowerPin" when "PowerSet" is set to "OFF".

PowerCurrent: [0 -0,5 Ampere] Generic number???? Unit: Number???
Indicates the maximum current applied to the component through the channel identified with "PowerPin" when "PowerSet" is set to "OFF".

GateTime: [0-1 sec]
Indicates measurement time. The possible values are included in the interval: 0-1 and is expressed in seconds. If "Time" is= 0, the measurement time is not defined at the macro level but at a lower level. ("Drivers" and "DSP environment" for internal instruments management). See Fig. 1-1.

[5] For further details, see macro "POWER" description, specifically the parameters viewed with the button "View MEMO Parameters".

2.16 OPTOISOLATOR

The OPTOISATOR macro is used to check the optoisolator kind components present on the UUT. The optoisolator is an electronic component which allows to transfer a signal between two circuits maintaining their galvanic insulation. This is performed by coupling optically a LED and a photo sensible element. Changes in light linked to the input signal are detected by the photo sensible element obtaining the information transfer from a circuit to the other without electrical continuity.

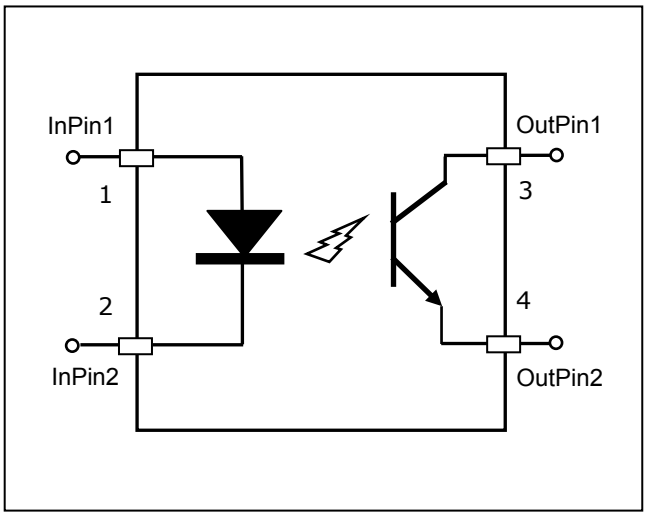

To execute the checks, the main parameters are those related to the functionality of the component to be checked and to the internal system points (channels) where the component pins to be tested are connected. The optional parameters are those related to the mode by which the macro executes the measurements

Below, a synthetic description of the macro parameters, describing the main parameters first and then the optional parameters

OPTOISOLATOR (Name, ModuleType, TolPos, TolNeg, InPin1, InPin2, OutPin1, OutPin2 ClusterName, ValueOn, ValueOff, Kfactor, MeasureMode, DisabledTest, TestResult, MeasureType, Recycle, Time, InCurrent, InVolt, Outcurrent, OutVolt)

Main parameters

Name:
Indicates the name of the component under test. The component name is the first element of the couple which identifies the node on the UUT: <ComponentName-PinNumber>. If the component is associates to a complex device, the parameter "Name" is: "ComponentName#*i*", where *i* identifies the part "SUBi" of the complex device.

ModuleType: [NONE|VL|VBS|VL_DYNAMIC]
Identifies the kind of macro in use, that is the language used to develop the Macro. The possible values for this parameter are:

NONE	The macro in use is written with VIVA Native Language.
VL	The macro in use is written in VIVA Language (VL). The macro is executed in the static mode. This is the default value for the macro "OPTOISOLATOR".
VBS	The macro in use is written in Visual Basic Script. (VBS).
VL_DYNAMIC	The macro in use is written in VIVA Language Dynamic (VL_DYNAMIC). The macro is executed in the dynamic mode.

TolPos: [0-100%]
indicates the maximum positive tolerance accepted in the component measurement. The parameter is expressed in percent values, with possible values included in the interval: 0-100.

TolNeg: [0-100%]
Indicates the maximum negative tolerance accepted in the component measurement. The parameter is expressed in percent values, with possible values included in the interval: 0-100.

InPin1: [0-N]
Indicates the channel connected to the positive input terminal of the component under measurement, where positive is the pole connected to the generator which stimulates the component by injecting current or by applying voltage. The parameter is expressed as a whole number, with possible values included in the interval 0-N. If "InPin1" is=0, the macro is not executed. For the optoisolator component, this channel is connected to the node which identifies the anode of the input diode.

InPin2: [0-N]
Indicates the channel connected to the negative input terminal of the component under measurement, where negative is the terminal opposite to the positive terminal of the component under measurement. The parameter is expressed as a whole number, with possible values included in the interval: 0-N. If "InPin2" is = 0, the macro is not executed. For the optoisolator component, this channel is connected to the node which identifies the cathode of the input diode.

OutPin1: [0-N]
Indicates the channel connected to the positive output terminal of the component under measurement, where positive is the pole connected to the generator which powers the output circuit of the component by injecting current or by applying voltage. The parameter is expressed as a whole number, with possible values included in the interval: 0-N. If "OutPin1" is=0, the macro is not executed. For the optoisolator component this channel is connected to the node which identifies the collector of the output transistor.

OutPin2: [0-N]
Indicates the channel connected to the negative output terminal of the component under measurement, where negative is the terminal opposite to the positive terminal of the component under measurement. The parameter is expressed as a whole number, with possible values included in the interval: 0-N. If "OutPin2" is= 0, the macro is not executed. For the optoisolator component, this channel is connected to the node which identifies the output transistor emitter

Optional Parameters

ClusterName: [String]
Indicates the cluster name used to encode the macro. The word "cluster" in the VL environment, indicates the compressed code included between the instructions START "ClusterName" " Cluster Parameters….; and ENDTEST;. For the OPTOISOLATOR macro, the default parameter value is: "Opto", which identifies the part of code developed in VL to check the optoisolator components.

ValueON: [0 -100 Volt]
Indicates the voltage drop expected value at the edges of the component output terminals, connected to the channels identified with parameters "Outpin1" and "OutPin2", when the output transistor is in conduction.

ValueOFF: [0 -100 Volt]
Indicates the voltage drop expected value at the edges of the component output terminals, connected to the channels identified with parameters "Outpin1" and "OutPin2", when the output transistor is not in conduction. When the output transistor is in interdiction, the expected output voltage value corresponds to the value set for the generator which powers the component output circuit, with the parameter "OutVolt"

InCurrent: [0-0,5 A]
Indicates the injected current value to the pin corresponding to the positive input terminal, connected with the anode input diode of the component under measurement. The parameter is expressed in A, with possible values included in the interval: 0-0,5.

InVolt: [0-100 V]
Indicates the voltage value applied to the pin corresponding to the positive input terminal, connected with the anode of the input diode of the component under measurement. The parameter is expressed in V, with possible values included in the interval: 0-100

OutCurrent: [0-0,5 A]
Indicates the value of the current injected to the pin corresponding to the positive output terminal, connected with the output transistor collector of the component under measurement. The parameter is expressed in A, with possible values included in the interval: 0-0,5.

OutVolt: [0-100 V]
Indicates the voltage value applied to the pin corresponding to the positive output terminal, connected to the output collector of the component under measurement. The parameter is expressed in V, with possible values included in the interval: 0-100.

MeasureMode: [ON|OFF]
Defines the kind of scale used on the digital-analog indicator shown in the tag "Program". The parameter can have one of the following values:

- ***ON*** *Displays the voltage value measured when the output transistor is ON.*
- ***OFF*** *Displays the voltage value measured when the output transistor is OFF.*

DisabledTest: [NONE|ON|OFF]
Indicates the measure mode on the component which is not going to be executed. The parameter can have one of the following values:

- ***NONE*** *No measure mode disabled. Verifies that the output transistor both in the ON and in the OFF status*
- ***ON*** *The functionality of the component in the status which schedules the output transistor in the ON status is not checked*
- ***OFF*** *The functionality of the component in the status which schedules the output transistor in the OFF status is not checked*

TestResult: [Test Result|Force Pass|Force Fail|Force Skip]
Defines the kind of result obtained when executing the macro.
For further information about the parameter, see: ***TestResult*** *in chapter 2.1 "Parameters with common meaning to several system macros.*

MeasureType: [Normal|Average|RecOnError|Maximum|Minimum|Peak ToPeak]
Defines the kind of elaboration made by the macro on the executed measurements.
For further information about the parameter, see: ***MeasureType*** *in chapter 2.1 "Parameters with common meaning to several system macros".*

Recycle: [0-1.000.000]
Indicates how many times the measurement is executed.
For further information about the parameter, see: ***Recycle*** *in chapter 2.1 "Parameters with common meaning to several system macros*

Time: [0-1 sec]
Indicates the measure time. The parameter can have values included in the interval: 0-1 and is expressed in seconds. If "Time" is= 0, the measure time is not defined at the macro level, but at a lower level. ("Drivers" and "DSP environment" for internal instruments management). See Fig. 1-1.

2.17 VOLTAGE_REG

The VOLTAGE_REG macro is used to check the voltage regulator kind components present on the UUT. The voltage regulator is an electronic component used to provide a constant voltage value output. The voltage regulator is characterized by three connection pins, that is: an input, an output and the connection to the reference point, usually grounded. The VOLTAGE_REG macro is used by the "Voltage Regulator" function.

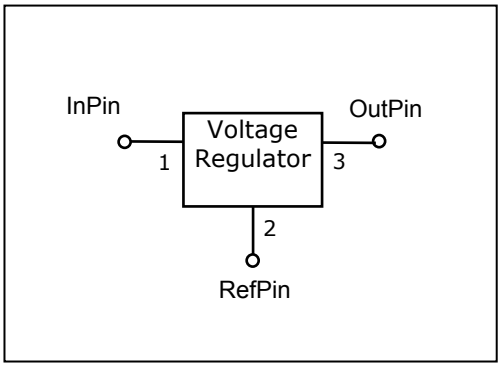

To execute the checks, the main parameters are those related to the functionality of the component to be checked and to the internal system points (channels) where are connected the pins of the component to be checked. The optional parameters are related to the mode by which the macro executes the measurements.

Below, a synthetic description of the macro parameters, describing the main parameters first and then the optional parameters.

VOLTAGE_REG (Name, ModuleType, TolPos, TolNeg, InPin, RefPin, OutPin, ClusterName Value, PowerSet, TestResult, MeasureType, Recycle, Time, InCurrent, InVolt)

Main Parameters

Name:
Indicates the name of the component under test. The component name is the first element of the couple which identifies the node on the UUT: <ComponentName-PinNumber>. If the component is associated to a complex device, the parameter "Name" becomes: "ComponentName#*i*", where *i* identifies the part "SUBi" of the complex device.

ModuleType: [NONE|VL|VBS|VL_DYNAMIC]
Identifies the kind of macro in use, that is the language used to develop the Macro. The parameter can have one of the following values:

NONE	The macro in use is written in VIVA Native Language.
VL	The macro in use is written in VIVA Language (VL). The macro is executed in the static mode. This is the default value of the VOLTAGE_REG macro.
VBS	The macro in use is written in Visual Basic Script. (VBS).
VL_DYNAMIC	The macro in use is written in VIVA Language Dynamic (VL_DYNAMIC). The macro is executed in the dynamic mode.

TolPos: [0-100%]
Indicates the maximum positive tolerance accepted in the component measurement. The parameter is expressed in percent, with possible values included in the interval: 0-100.

TolNeg: [0-100%]
Indicates the maximum negative tolerance accepted in the component measurement. The parameter is expressed in percent, with possible values included in the interval 0-100.

InPin: [0-N]
Indicates the channel connected to the input terminal of the component under measurement, connected to the generator which stimulates the component by injecting current or by applying voltage. The parameter is expressed as a whole number, with possible values included in the interval: 0-N. If "InPin" is= 0, the macro is not executed.

RefPin: [0-N]
Indicates the channel connected to the reference terminal of the component under measurement. The parameter is expressed as a whole number, with possible values included in the interval: 0-N. If "RefPin" is =0, the macro is not executed.

OutPin: [0-N]
Indicates the channel connected to the output terminal of the component under measurement. On this channel is executed the voltage measurement to check the component correct operation. The parameter is expressed as a whole number, with possible values included in the interval: 0-N. If "OutPin" is =0, the macro is not executed.

Optional Parameters

ClusterName: [String]
Indicates the cluster name used to encode the macro. The word "cluster" in VL environment indicates the code included between the two instructions START "ClusterName" " Cluster Parameters….; and ENDTEST;. For the VOLTAGE_REG macro, the default value: is "Regulator", which identifies the part of the code developed in VL to check the Voltage Regulator components.

Value: [-100 -+100 Volt]
Indicates the expected voltage value at the edges of the output terminal, connected to the channel identified with the parameter "Outpin".

PowerSET: [ON|OFF]
Defines the status of the section where the macro for the user power supplies status is executed. During the macro execution, the user power supplies can be switched off or switched on. This aspect changes the activities that can be executed through the macro. The parameter can have one of the following values:

ON *Indicates that the user power supplies is ON,. To power on the user power supplies the macro POWERON must be executed. If the parameter "PowerSet" set to "ON"* ***no voltage is applied*** *to the input terminal and the existing voltage value on the output terminal is checked to be the same as the voltage value defined with "Value".*

OFF *Indicates that the user power setting is OFF. In order to have the user power settings are off it is necessary not to execute the POWERON macro or that the macro POWEROFF has been executed. With "PowerSet" parameter set to "OFF" voltage* ***is*** *applied to the input terminal and it is checked that on the output terminal is present the value defined by parameter "Value".*

TestResult: [Test Result|Force Pass|Force Fail|Force Skip]
Defines the kind of result obtained when executing the macro.
For further information about the parameter, see: ***TestResult*** *in chapter 2.1 "Parameters with common meaning to several system macros*

MeasureType: [Normal|Average|RecOnError|Maximum|Minimum|Peak ToPeak]
Defines the kind of elaborations made by the macro on the executed measurements.
For further information on the parameter, see: ***MeasureType*** *in chapter 2.1 "Parameters with common meaning to several system macros".*

Recycle: [0-1.000.000]
Indicates how many times the measurement is executed.
For further information about the parameter, see: ***Recycle*** *in chapter 2.1 "Parameters with common meaning to several system macros.*

Time: [0-1 sec]
Indicates the measure time. The parameter can have one of the values included in the interval: 0-1 and is expressed in seconds. If "Time" is=0, the measure time is not defined at the macro level but at a lower level. ("Drivers" and "DSP environment" for internal instrument management). See Fig. 1-1.

InCurrent: [0-0,5 A]
Indicates the value of the current injected to the pin corresponding to the input terminal of the component under measurement. The parameter is expressed in A, with possible values included in the interval: 0-0,5. It is important to remind that the current range [0-0,5 A] is correct when the parameter "InVolt" has a value included in the interval [-10-+10 V]. For values not included in this interval, the range of values for the parameter "InCurrent" is [0-0,1 A].

InVolt: [-100-+100 V]
Indicates the voltage value applied to the pin corresponding to the input terminal of the component under measurement. The parameter is expressed in V, with possible values included in the interval: 0-100.

2.18 POWER

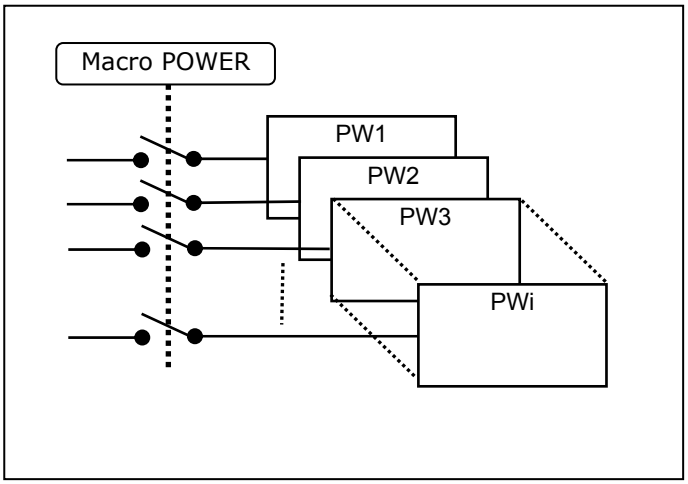

The POWER macro is used to manage the system user power supplies. The macro is used by the functions "PowerOn" and "PowerOff" to power on/off the system user power supplies. The choice of executing the functions "PowerOn" and "PowerOff", in the testing program execution, is made in the "Create Program" phase, flagging the option: "☑ Power", in the dialogue "Advanced Create Program Settings".
In the "Debug Environment" are shown the sections "POWERON" and "POWEROFF" located after the sections related to analog checks on UUT components. Between the sections "POWERON" and "POWEROFF" there are also the sections related to the checks on components that schedule checks with UUT powered by user power supplies. An example of sections included between "POWERON" and "POWEROFF" is that made up by sections: "VOLTAGEREGULATOR", "OSCILLATOR", "GATE" and "DIGITAL".

The functions "PowerOn" and "PowerOff" power on/off all system power supplies according to the parameters defined in the dialogue activated with button "View MEMO Parameters" from page: "Macro View". For each user power supply existing on system, identified with label Pwi, it is possible to define the following parameters:

CURRENT Value of current supplied by the power supply when it is on. (expressed in Ampere).

DELAY Indicates the delay time to power on the power supplies. When the macro POWER is executed to power on the power supplies, the delay time indicates how much time passes before the instruction is executed (expressed in: msec)

EXTINT Indicates whether the power supply output is connected directly to the system receiver (EXT) or to the SERVALI board and then to the system receiver (INT). The possible values for this parameter are: EXT or INT.

SENSE Indicates whether the power supplies has sense wires to measure the supplied voltage. The possible values of this parameter can be: OFF or ON.

SET Indicates the management mode set for the specific power supply when the macro POWER. Is executed. Possible values are:

- **ON** The specific power supply can be powered on/off when executing the POWER macro.
- **OFF** The specific power supply is always powered off when executing the POWER macro.
- **NO** The specific power supply is not managed when executing the POWER macro.

VOLT Voltage supplied by the power supply when it is on. (expressed in Volts).

The values defined with "View MEMO Parameters" must be in accordance to the power supply features as described in the dialogue "User Power Settings", which can be selected from: "System Configuration" environment. (see Fig. 2-5).
It is important to remember that values defined with the dialogue "View MEMO Parameters" are related to the specific instance of macro POWER. There can be several sections scheduling the POWER macro execution. Each one of these can manage a variable number of user power supplies on the system.

To execute the checks, the main parameters are those related to the component functionality to be checked and to system internal points (channels) where the component pins are connected. The optional parameters are related to the modes by which the macro executes measurements

Below, a synthetic description of macro parameters, referring the main parameters first and then the optional parameters

POWER (Name, ModuleType, PowerNumber, ClusterName, FinalDelay, PowerView, SysPowerName, PowerNumber, CheckPower)

Main Parameters

Name:
Indicates the name of the component where the macro is applied. In the section POWERON (which identifies the PowerOn execution) this parameter has the value: "POWERON_COMP". In the section POWEROFF (which identifies the PowerOff execution) this parameter has the value: "POWEROFF_COMP".

ModuleType: [NONE|VL|VBS|VL_DYNAMIC]
Identifies the kind of macro in use i.e. the language used to develop the Macro. The possible values are:

NONE	The macro in use is written in VIVA native language.
VL	The macro in use is written in VIVA Language (VL). The macro is executed in the static mode. This is the default value for "POWER" macro.
VBS	The macro in use is written in Visual Basic Script. (VBS).
VL_DYNAMIC	The macro in use is written in VIVA Language Dynamic (VL_DYNAMIC). The macro is executed in the dynamic mode.

PowerNumber: [1-45]
Indicates the current number of section POWERON. There can be more sections POWERON in the program. In the current VIVA software release (1.4.0.3) the parameter is not managed by the code written in VL.

Optional Parameters

ClusterName: [String]
Indicates the name of the cluster used to encode the macro. In VL environment "cluster" corresponds to the code included between the instructions: START "ClusterName" " Cluster Parameters….; and ENDTEST;. For the POWER macro the default value is: "Power", identifying the part of code developed in VL for system user power supplies management.

FinalDelay:[0-1 sec]
Indicates the delay time after all power supplies power on. It is the time passing from the last power supply power on and the execution of the next instruction in the testing program.

PowerView: [1-32]
Indicates the power supply for which the voltage value supplied is indicated on the digital-analog indicator shown in the page "Program" during the macro execution.

SysPowerName: [String]
Indicates the name of current POWERON section. More than one section POWERON can be found in the program. In the current VIVA software release (1.4.0.3) the parameter is not managed by the code written in VL.

CheckPower: [NO|YES]
Defines if it must be checked that the voltage supplied corresponds to that defined in the dialogue "View MEMO Parameters". The possible values are:

NO	*After the power on, **it is not checked** that the voltage supplied corresponds to that defined in the dialogue: "View MEMO Parameters".*
YES	*After the power on, **it is checked** that the voltage supplied corresponds to that defined in the dialogue: "View MEMO Parameters".*

PowerMode: ***[ON|OFF]***

Indicates whether the user power supplies must be on or off. The possible values are:

ON *When executing the macro "POWER" the user power supplies are powered on. The specific power supply will be powered on depending on the value defined for parameter "SET" in the dialogue: "View MEMO Parameters".*

OFF *When executing the macro "POWER" the user power supplies are powered off. The specific power supply will be powered off depending on the value defined for parameter "SET" in the dialogue: "View MEMO Parameters".*

The value of this parameter is: "ON" for "POWERON" sections and: "OFF" for"POWEROFF" sections.

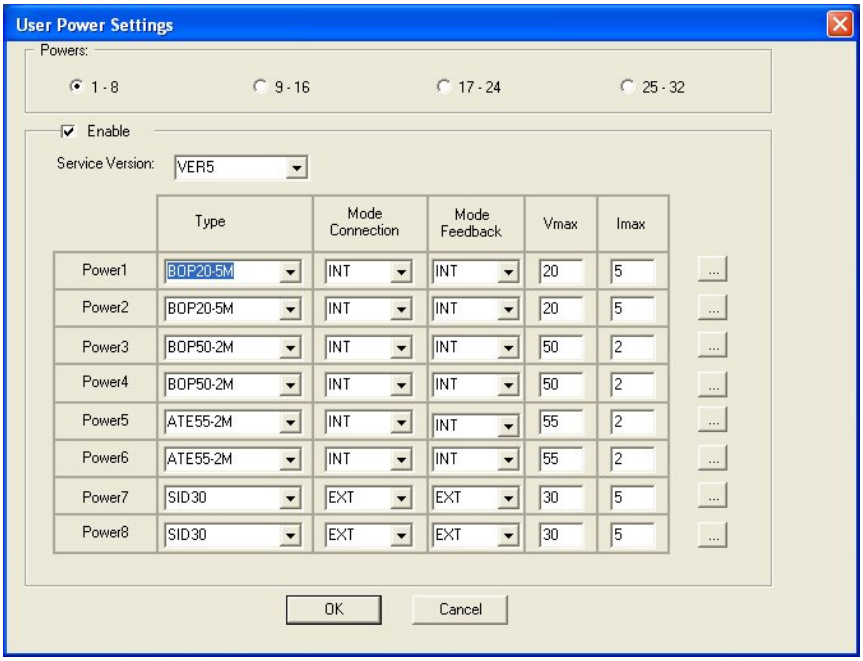

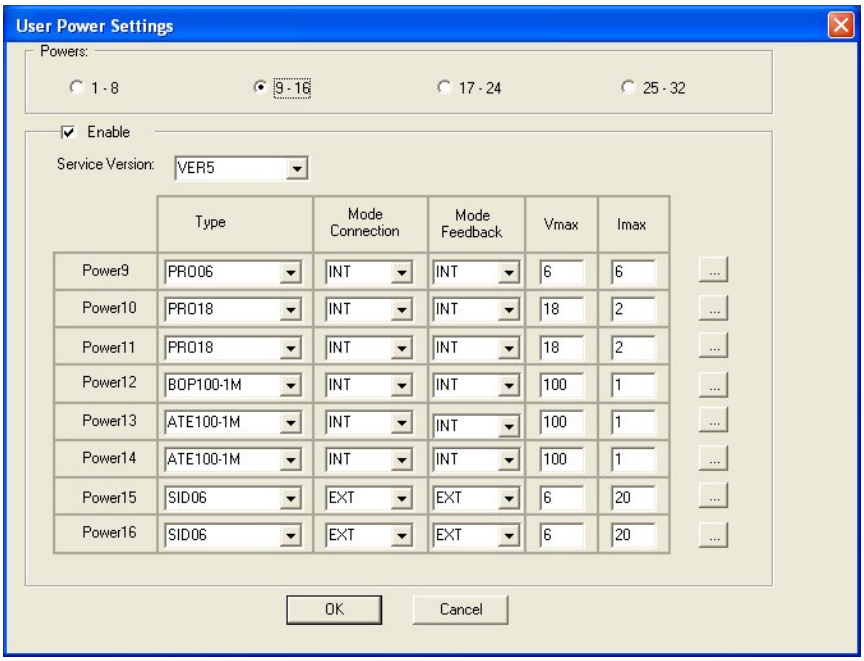

Fig. 2-5 - VIVA: Example of User Power Settings for PW1-PW8 and PW9-PW16

2.19 POWER_CHECK

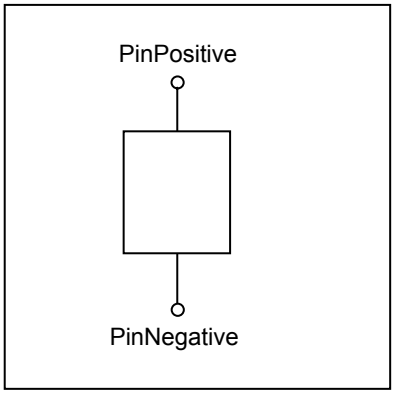

The POWER_CHECK macro is used to check the existence of voltage between two points. The macro can be used, after executing the function "PowerOn", in order to check existence of voltage value in a UUT node. The function "PowerOn" is used to execute the power on instruction and possibly to check the voltage value supplied for those power supplies having sense wires. To check that the voltage supplied by a power supply is present on two specific UUT points, it is necessary to execute the POWER_CHECK macro on these two points.

The POWER_CHECK macro can be inserted after a POWERON section to check that the voltage supplied by the power supply powered on with the POWERON section, is present on two specific UUT points. (For further details, see 3.3.7 "Insert a cluster from Debug Environment")

To execute the checks, the main parameters are those related to the functionality of the component to be checked and to system internal points (channels) where are connected the pins of the component under test. The optional parameters are those related to the modes by which the macro executes the measurements.

Below, a synthetic description of the parameters, describing the main parameters first and then the optional parameters.

POWER_CHECK (Name, ModuleType, Value, TolPos, TolNeg, PinPositive, PinNegative, TestResult, MeasureType, Rcycle, StrobeTime)

Main Parameters

Name:
Indicates the name of the component where the macro is applied.

ModuleType: [NONE|VL|VBS|VL_DYNAMIC]
Identifies the kind of macro in use, i.e. the language used to develop the Macro. The possible values are:

NONE	The macro in use is written in VIVA native language.
VL	The macro in use is written in VIVA Language (VL). The macro is executed in the static mode. This is the default value for "POWER_CHECK" macro.
VBS	The macro in use is written in Visual Basic Script. (VBS).
VL_DYNAMIC	The macro in use is written in VIVA Language Dynamic (VL_DYNAMIC). The macro is executed in the dynamic mode.

Value: [0 -100 Volt]
Indicates the expected voltage value. The parameter is expressed in Volts, with possible values included in the interval 0-100.

TolPos: [0-100%]
Indicates the maximum positive tolerance accepted in the component measurement. The parameter is expressed in percent, with possible values included in the interval 0-100.

TolNeg: [0-100%]
Indicates the maximum negative tolerance accepted in the component measurement. The parameter is expressed in percent, with possible values included in the interval 0-100.

PinPositive: [0-N]
Indicates the channel connected to the positive pole of the point under measurement. The parameter is expressed as a whole number, with possible values included in the interval: 0-N. If "RefPin" is = 0, the macro is not executed.

PinNegative: [0-N]
Indicates the channel connected to the output terminal of the component under measurement. The parameter is expressed as a whole number, with possible values included in the interval: 0-N. If "OutPin" is = 0, the macro is not executed.

Optional Parameters

ClusterName: [String]
Indicates the name of the cluster used to encode the macro. In the VL environment "cluster" corresponds to the code included between the instructions: START "ClusterName" " Cluster Parameters….; and ENDTEST;. For the POWER CHECK macro the default value of this parameter is: "PwCheck", which identifies the part of code developed in VL for system user power supplies management.

TestResult: [Test Result|Force Pass|Force Fail|Force Skip]
Defines the kind of result obtained with the macro execution.
For further details on this parameter, see ***TestResult*** *in chapter 2.1 "Parameters with common meaning to several system macros"*

MeasureType: [Normal|Average|RecOnError|Maximum|Minimum|Peak ToPeak]
Defines the kind of elaborations made by the macro on executed measurements.
For further details on this parameter, see ***MeasureType*** *in chapter 2.1 "Parameters with common meaning to several system macros".*

Recycle: [0-1.000.000]
Indicates how many times the measurement is executed.
For further details on this parameter, see ***Recycle*** *in chapter 2.1 "Parameters with common meaning to several system macros.*

StrobeTime: [0-1 sec]
Indicates the delay time passing between the starting of POWER_CHECK macro and voltage measurement execution.

2.20 AUTIC

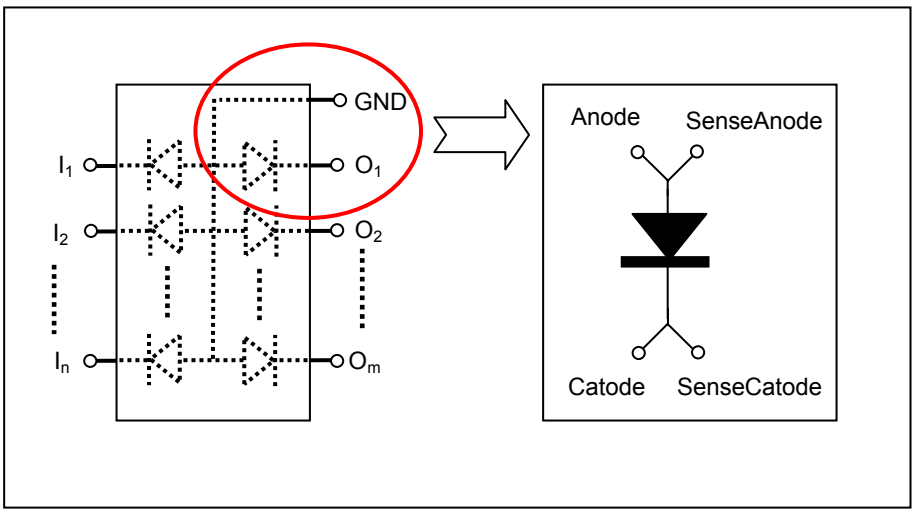

The AUTIC macro allows to check the operation of digital integrated circuits through vectorless technique.[6] With this technique the component is not powered and no test patterns are used on input/output vectors for the check. As for the pins, both input and output, it checked a feature that can be measured with a voltage value. The AUTIC macro executes the check on a specific pin of the integrated circuit. Pin that can be checked with the AUTIC macro, are those with a diode-like behavior with the cathode on the pin and the anode on a reference pin of the integrated circuit. (usually the grounding, GND). The AUTIC macro checks this electric bipole[7], identified by an active pin and by the reference pin, checking direct polarity.

The voltage value used by the macro for the checking is obtained executing the program in the "Autolearn" mode on a sample UUT. Such execution is made to acquire from the UUT the value of the main parameters, related to measurements that must be executed. This mode of execution is relevant only when a sample UUT is used, whose perfect and correct operation is beyond all doubt. The acquired values are reliable if, after "Autolearn" mode execution, repeated executions in the "Normal" mode with the same sample UUT, **always** give the output result of "PROGRAM PASS". Executions on other UUT will give correct results only if the "Autolearn" mode execution and subsequent "Normal" mode execution have been made with a proper UUT

Below, a synthetic description of macro parameters, referring the main parameters first and then the optional parameters.

AUTIC **(Value, TolPos, TolNeg, Anode, Catode, SenseAnode, SenseCatode, Wire, Quality, JunctionMode, TestResult, MeasureType, Recycle, Time, Current, ResPar, CapPar)**

Main Parameters

Value: **[0 -100 Volt]**
Indicates the expected voltage drop values at the pins of the junction checked by the macro. The parameter is expressed in Volts, with possible values included in the interval: 0-100. The parameter "Value" must be acquired executing the macro on a sample UUT correctly operating.

[6] To check the functionality of an integrated digital component, it is necessary, after identifying the list of input/output pins, to define the configurations of the output pins with respect to predetermined input pins configurations. The list of input/output pins is named, respectively, input and output vector. The possible vector configurations are called input patterns and output patterns. The vectorless technique allows to check integrated digital components without use of input or output vectors and with no need to power the component. With such technique it is possible to check analog features of the input and output pins present towards reference points.
[7] For the definition of "electric bipole", please refer to FNODE macro description.

TolPos: [0-100%]
Indicates the maximum positive tolerance accepted when measuring the component. The parameter is expressed as a percentage, with possible values included in the interval: 0-100. When creating the program, the value of this parameter is set to 30.

TolNeg: [0-100%]
Indicates the maximum negative tolerance accepted when measuring the component. The parameter is expressed as a percentage, with possible values included in the interval: 0-100. When creating the program, the value of this parameter is set to 30.

Anode: [0-N]
Indicates the channel connected to the positive terminal (anode) of the component under measurement, where positive is the pole connected to the generator that stimulates the component by injecting current or by applying voltage. The parameter is expressed as a whole number, with possible values included in the interval: 0-N. If "Anode" is=0 the macro is not executed.

Catode: [0-N]
Indicates the channel connected to the negative terminal (cathode) of the component under measurement, where negative is the terminal opposite to the positive terminal of the component under measurement. The parameter is expressed as a whole number, with possible values included in the interval: 0-N. If "Cathode" is = 0, the macro is not executed

Optional Parameters

SenseAnode: [0-N]
Indicates the channel connected to the positive terminal of the voltage meter which, for 4 or 6 wire measurements is connected to the positive pole (anode) of the component under measurement. For 2 and 3 wire measurements, the voltage meter is connected internally to the generator which stimulates the component under measurement. The parameter is expressed as a whole number, with possible values included in the interval: 0-N. If "SenseAnode" is = 0, no channel is in use.

SenseCatode: [0-N]
Indicates the channel connected to the negative terminal of the voltage meter which, for 4 or 6 wire measurements is connected to the negative pole (catode) of the component under measurement. For 2 and 3 wire measurements, the voltage meter is internally connected to the generator which stimulates the component under measurement. The parameter is expressed as a whole number, with possible values included in the interval: 0-N. If "SensePin2" is = 0, no channel is in use.

Wire: [Auto|2 WIRE|3 WIRE|4 WIRE|6 WIRE]
Indicates the number of wires (or channels) used for measurement.
For further details on this parameter, see **Wire** *in chapter 2.1 "Parameters with common meaning to several system macros".*

Quality: [0-100%]
Indicates the quality average of the measurement.
For further details on this parameter, see ***Quality*** *in chapter 2.1 "Parameters with common meaning to several system macros".*

JunctionMode: [Direct|Invert|]
Indicates the measurement mode, i.e. if the functionality of the direct polarity diode is checked or the inverted polarity diode. Possible values are:

Direct	*The diode has direct polarity, i.e. in a way that the current can flow from the anode to the cathode.*
Invert	*The diode has inverted polarity, i.e. in a way that the current can not flow from the cathode to the anode.*

When creating the program, the value of this parameter is set to: "Direct".

TestResult: [Test Result|Force Pass|Force Fail|Force Skip]
Defines the kind of result obtained when executing the macro.
For further details on this parameter, see ***TestResult*** *in chapter 2.1 "Parameters with common meaning to several system macros".*

MeasureType: ***[Normal|Average|RecOnError|Maximum|Minimum|Programmed| Peak ToPeak]***
Defines the kind of elaborations made by the macro on executed measurements.
For further details on this parameter, see ***MeasureType*** *in chapter 2.1 "Parameters with common meaning to several system macros".*

Recycle: ***[0-1.000.000]***
Indicates how many times measurement is executed.
For further details on this parameter, see ***Recycle*** *in chapter 2.1 "Parameters with common meaning to several system macros".*

Time: ***[0-1 sec]***
Indicates measurement time. The possible values of this parameter are included between 0 and 1 and is expressed in seconds. If "Time" is = 0, the measurement time is not defined at the macro level but at a lower level. ("Drivers" and "DSP environment" for internal instruments management). See Fig. 1-1.

Current: ***[0-0,5 A]***
Indicates the value of current injected on the junction. The parameter is expressed in A, with possible values included in the interval: 0-0,5. . If "Current" is = 0, its value is not defined at the macro level but at a lower level. ("Drivers" and "DSP environment" for internal instruments management). See Fig. 1-1

ResPar: ***[0-100.000.000 Ohm]***
Indicates the resistive value in parallel to the junction under measurement. The parameter is expressed in Farad, with possible values included in the interval: 0-100.000.000. The VIVA software determines the value of this parameter when generating the program or when the program is executed in the "Autodebug" or "Autolearn" modes. The parameter can be modified manually from the Debug Environment.

CapPar: ***[0-1 Farad]***
Indicates the capacitive value in parallel to the resistance under measurement. The parameter is expressed in Farad, with possible values included in the interval: 0-1. The VIVA software determines the value of this parameter when generating the program or when the program is executed in the "Autodebug" or "Autolearn" modes. The parameter can be modified manually from the Debug Environment.

2.21 JSCAN

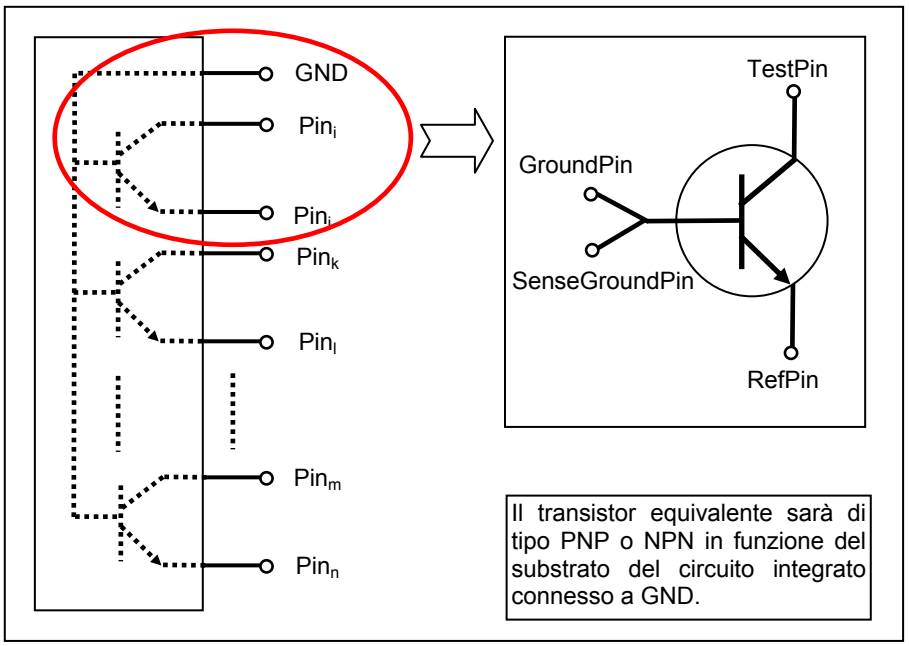

The JSCAN macro allows to check the operation of digital integrated circuits using the vectorless technique.[8] With this technique the component is not powered and no test patterns are used on input/output vectors. As for the pins, both input and output, it is checked a feature which can be measured with a voltage value. The JSCAN macro executes this checking on couples of pins of the integrated circuit. Pins that can be checked with the JSCAN macro, are those having a transistor-like behavior equivalent to the two verified pins representing the emitter ("RefPin") and the collector ("TestPin") of the transistor and a third reference pin of the integrated circuit which represents the transistor base ("GroundPin"). (normally, the ground GND). The JSCAN macro checks this electric tripole[9], identified by two active pins and by the reference pin, checking the conduction and interdiction of the equivalent transistor.

The voltage value used by the macro to execute the check, is obtained executing the program in the "Autolearn" mode on a sample UUT. This execution is made in order to acquire from the UUT the values of the main parameters related to the measurement that must be executed. This mode of execution is relevant only is a sample UUT is used, i.e. correctly operating. The acquired values are reliable if, after the "Autolearn" mode execution, repeated executions in the "Normal" mode, with the same sample UUT, **always** give as a result: "PROGRAM PASS". Executions on other UUT will give correct results *only* if the execution in the "Autolearn" mode, and subsequent verifications with the "Normal" mode, have been executed with a proper UUT. If several sample UUT are available, after executing the test in the "Autolearn" mode on the first sample UUT, it is important to repeat the test in the "Auto adjustment" mode. The data base of the program contains the average of all the acquired values in the first "Autolearn" mode and the subsequent acquired in the "Auto adjustment" mode.

Below, a synthetic description of the macro parameters, describing the main parameters first and then the optional parameters.

JSCAN **(Value, TolPos, TolNeg, RefPin, TestPin, GroundPin, SenseGroundPin, Frequency, CurrentDRA, CurrentDRB, TestResult, MeasureType, Recycle, Quality, SettligWave, ResParRefPin, ResParRefPin, CapParRefPin, CapParTestPin, Split, TestPinIso)**

Main Parameters

Value: **[0 -100 Volt]**
Indicates the expected value of the difference of two voltage values between the condition of transistor in interdiction and transistor in conduction. The two voltage values are measured on the equivalent transistor collector identified with parameter "TestPin". The parameter is expressed in Volts, with possible values included in the interval: 0-100.

[8] For detailed information about the "vectorless" definition, see the corresponding note in the chapter dedicated to macro AUTIC.
[9] The definition of "electric tripole" is equivalent to the "electric bipole" but the access to the tripole is performed with three terminals instead of two.

TolPos: [0-100%]
Indicates the maximum positive tolerance accepted in the component measurement. The parameter is expressed in percentage, with possible values included in the interval: 0-100. In the phase of program creation, the value of this parameter is set to 80. In the autolearning phase from sample UUT, a fixed value is calculated. The parameter "Value" must be increased adding the percentage corresponding to "TolPos".

TolNeg: [0-100%]
Indicates the maximum negative tolerance accepted in the component measurement. The parameter is expressed as a percentage, with possible values included in the interval: 0-100. In the phase "Create program" this parameter is set to 20.

RefPin: [List of numbers, included in the interval: 0-N]
Indicates the channels connected to UUT points, identifying the equivalent transistor emitter described with "RefPin". If "RefPin" is= 0, the macro is not executed.

TestPin: [0-N]
Indicates the channel connected to the UUT point identifying the equivalent transistor collector described with "TestPin". The parameter is expressed as a whole number, with possible values included in the interval: 0-N. If "TestPin" is = 0, the macro is not executed.

GroundPin: [0-N]
Indicates the channel connected to the UUT point identifying the equivalent transistor base described with "GroundPin". The parameter is expressed as a whole number, with possible values included in the interval: 0-N. If "GroundPin" is = 0, the macro is not executed.

SenseGroundPin: [0-N]
Indicates the channel connected to "GroundPin" sensing, i.e. the reference point for the equivalent transistor base. The parameter is expressed as a whole number, with possible values included in the interval: 0-N. If "SenseGroundPin" is = 0, no channel is in use.

Optional Parameters

Frequency: [0-100.000 Hz]
Indicates the frequency of the generator used for measurement, connected to equivalent transistor base.

CurrentDRA: [0-0,5 A]
Indicates the value of the current emitted by DRA generator and injected to the "TestPin" identifying the equivalent transistor connector. The parameter is expressed in A, with possible values included in the interval: 0-0,5.

CurrentDRB: [0-0,5 A]
Indicates the value of the current emitted by DRB generator and injected to the "RefPin" identifying the equivalent transistor emitter. The parameter is expressed in A, with possible values included in the interval: 0-0,5.

TestResult: [Test Result|Force Pass|Force Fail|Force Skip]
Defines the kind of result obtained when executing the macro.
*For further details on this parameter, see **TestResult** in chapter 2.1 "Parameters with common meaning to several system macros".*

MeasureType: [Normal|Average|RecOnError|Maximum|Minimum|Programmed| Peak ToPeak]
Defines the kind of elaborations made by the macro on executed measurements.
*For further details on this parameter, see **MeasureType** in chapter 2.1 "Parameters with common meaning to several system macros".*

Recycle: [0-1.000.000]
Indicates how many times the measurement is executed.
*For further details on this parameter, see **Recycle** in chapter 2.1 "Parameters with common meaning to several system macros".*

Quality: [0-100%]
Indicates the measurement quality degree.
*For further details on this parameter, see **Quality** in chapter 2.1 "Parameters with common meaning to several system macros".*

SettlingWave: [0-100]
Allows to change the delay time before acquiring sample measures. It is expressed as a number with possible values included in the interval: 0-100. This parameter determines the number of waveforms emitted by DRB generator, used to drive the base of the equivalent transistor, before executing the measurement. The number of waveforms emitted before measurement is the value indicated in "SettlingWave" divided ten. (e.g. if "settlingWave" is = "130", 13 waveforms are emitted before executing the measurement). Usually, after stimulating the component to be measured, a delay time is needed before starting measurements, to exit the initial transitory regimes due to the existence of capacities and inductances both in the module containing the measurement instruments and in the UUT. If "SettlingWave" increases, the delay time increases too and the accuracy of measurement is improved but more time is needed to execute the measurements.

ResParRefPin: [0-100.000.000 Ohm]
Indicates the resistive value in parallel to the pin indicated with "RefPIn" (equivalent transistor emitter) and the ground (GND). It is expressed in Ohm, with possible values included in the interval: 0-100.000.000. The VIVA software determines the value of this parameter when creating the program or when program is executed in the "Autodebug" or "Autolearn" modes. The parameter can be modified manually from Debug Environment.

ResParTestPin: [0-100.000.000 Ohm]
Indicates the resistive value in parallel to the pin indicated with "TestPIn" (equivalent transistor collector) and the Ground (GND). It is expressed in Ohm, with possible values included in the interval: 0-100.000.000. The VIVA software determines the value of this parameter when creating the program or when the program is executed in the "Autodebug" or "Autolearn" mode. The parameter can be modified manually from Debug Environment.

CapParRefPin: [0-1 Farad]
Indicates the capacitive value in parallel to the pin indicated with "RefPIn" (equivalent transistor emitter) and the Ground (GND). It is expressed in Farad, with possible values included in the interval: 0-1. The VIVA software determines the value of this parameter when creating the program or when the program is executed in the "Autodebug" or "Autolearn" mode. The parameter can be modified manually from Debug Environment.

CapParTestPin: [0-1 Farad]
Indicates the capacitive value in parallel to the pin indicated with "TestPIn" (equivalent transistor collector) and the Ground (GND). It is expressed in Farad, with possible values included in the interval: 0-1. The VIVA software determines the value of this parameter in the "Create Program" phase, or when the program is executed in the "Autodebug" or "Autolearn" mode. This parameter can be manually modified from Debug Environment.

Split: [NO|YES]
Indicates whether the generator connected to "TestPin" is always at a high value, or there must be a transition from the high to the low value, in the delay time passing from the reading to check the conduction status and the reading to check the interdiction status of the equivalent transistor. If there's a great capacity between "TestPin" and Ground ("CapParTestPin"), when measurement is executed in the two moments to check the conduction and interdiction, it could be possible to measure two voltage levels that make us guess the check is correct (the difference between the two measurements is congruent with values defined with: "Value", "TolPos" and "TolNeg", without regard to the existence of the signal which drives the transistor base through the generator connected to "RefPin"). The two measurements that can bring us to a false diagnose are executed in a time where the capacitor load is not ended yet, hence presenting values that could bring us to consider the equivalent transistor as correctly operating, even though not driven on the base. If we shift from the high level to the low level of the signal connected to "TestPin" we can see how the two measurements V_{close} and V_{open} are executed with the same delay time with respect to the raise of signal applied to "TestPin". So, in case of lack of signal on the transistor base,

the test result is: "FAIL", i.e. correct diagnose (see drawings c and d in Fig. 2-8*). The possible values for this parameter are:*

NO *The signal applied to "TestPin" is brought at a high level and kept high until the two measurements are executed (V_{close} and V_{open}), to calculate the value ΔV which must be compared with "Value".*

YES *Between the two measurements, V_{close} and V_{open}, the signal applied to "TestPin" executes a short shift from high level to low level. Hence the two measurements, V_{close} and V_{open}, are executed with the same delay time with respect to the raise of the signal applied to "TestPin".*

TestPinIso: [0-1.000.000]

Indicates the number of equivalent transistors connected to the same signal of the equivalent transistor collector, identified with "TestPin", (that JSCAN macro is checking).

The figure here below, shows the drivers used to power the equivalent transistor, the resistive and capacitive components and the instrument used to execute the two measurements, V_{close} and V_{open}.

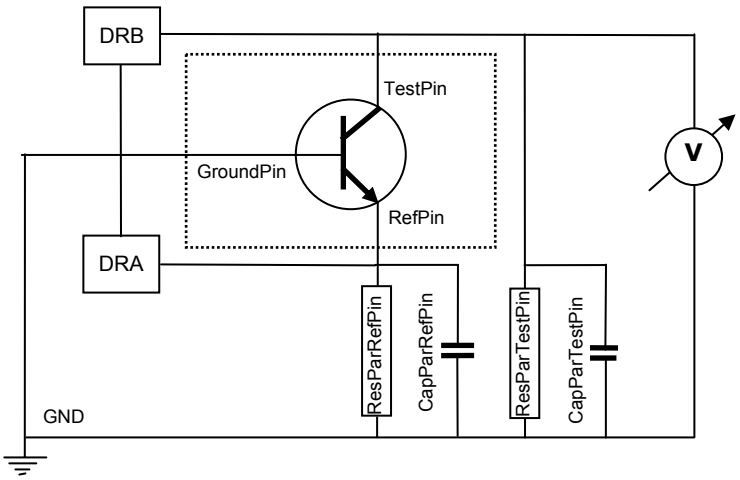

Fig. 2-6 - VIVA: JSCAN Drivers, parallel resistors, parallel capacitors and voltage meter

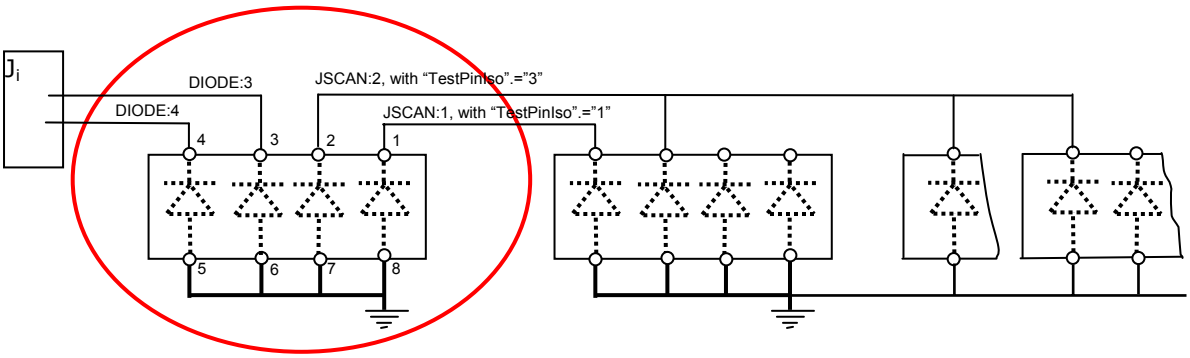

Fig. 2-7 - VIVA: JSCAN function, related macros and "TestPinIso" parameters.

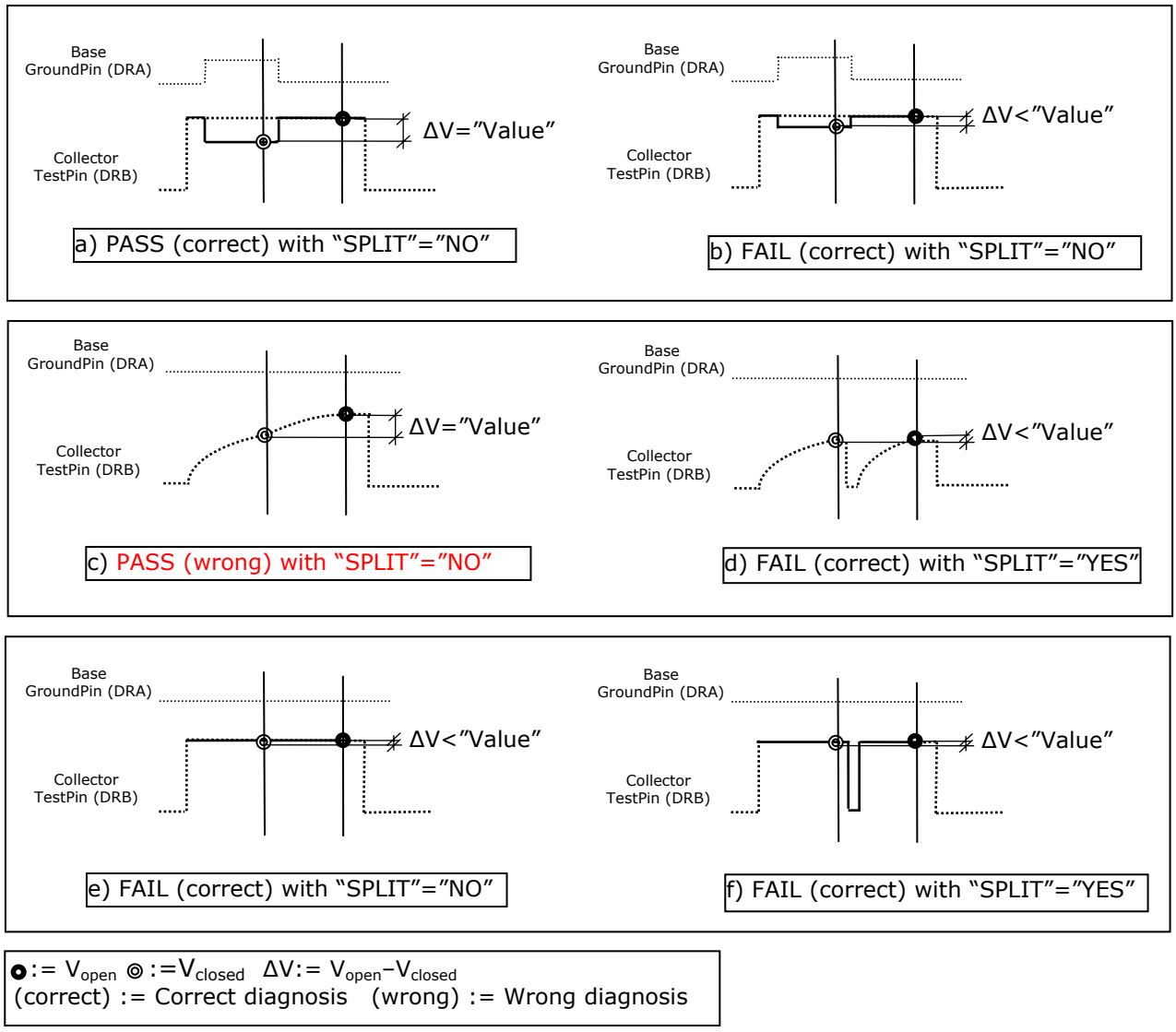

◉ := V_{open} ◎ :=V_{closed} ΔV:= V_{open}–V_{closed}
(correct) := Correct diagnosis (wrong) := Wrong diagnosis

Fig. 2-8 - VIVA: JSCAN Test Result with "SPLIT"="NO" and "SPLIT"="YES"

2.21.1 JSCAN function and system macro used

When creating the program, the VIVA software analyzes the associated function for every testable component and creates macro instances that make up this function so that they can be executed in the testing program "Run" phase.

The JSCAN function is associated to JSCAN macro, but the generation process is different, since the component pins can be checked with the macro DIODE or with the JSCAN macro. In the test generation, the following elaborations are executed:

- The pins of the integrated circuit with signals (or tracks) not connected to other UUT points, or possibly connected to UUT terminal, are checked with the DIODE macro.
- The pins checked as equivalent transistor emitters ("RefPin") must not be connected to other pins used as equivalent transistor emitters.
- If there are other equivalent transistor connected with the equivalent transistor collector, tested by the current JSCAN macro, these are indicated with the value corresponding to "TestPinIso"

Taking as reference Fig. 2-7, we can notice that the component circled in red, associated to function JSCAN, two instances of the DIODE macro are scheduled, for pins 3 and 4, two JSCAN macro instances, for pins 1 and 2, with parameter "TestPinIso" set respectively to 1 and 3.

2.22 OPENFIX

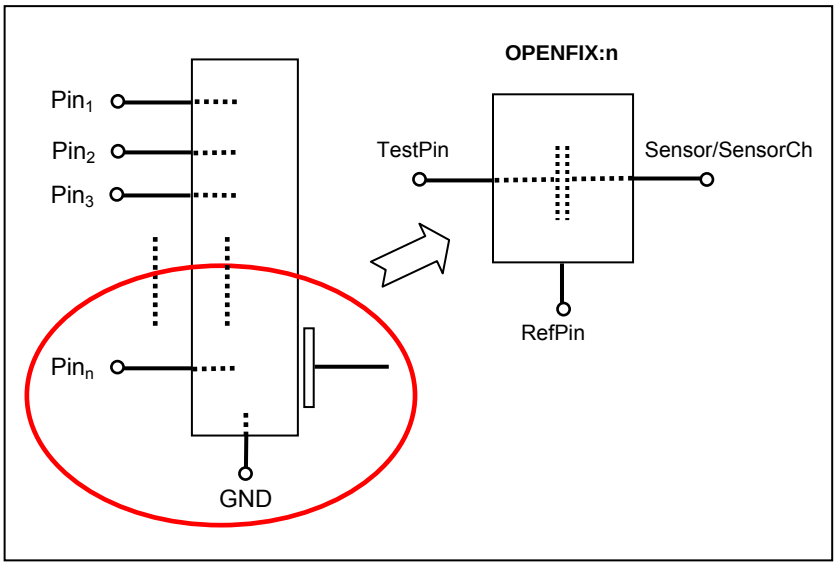

The OPENFIX macro allows to check the digital integrated circuits operation using the vectorless technique.[10] With this technique, the component is not powered and no test patterns are used on input/output vectors to perform the check. As for the pins, both input and output, that can be checked, it is checked a feature which can be measured with a voltage value. The OPENFIX macro executes the checking on a specific pin of the integrated circuit. The macro OPENFIX is oriented mainly to check the existence of interrupted pins into the integrated circuit or the existence of interruptions or incorrect solderings between UUT polygonals and the integrated circuit pin connected to the polygonal. To execute the check, a capacitive sensor is used, made up by a metal plate located on the container of the integrated circuit corresponding to the capacitor harmour having as a dielectric the container of the integrated circuit and the other armor the inside of the integrated circuit. By applying on the pin an AC signal with constant width, it is possible to measure on the capacitive sensor an AC signal value proportional to the capacitive value existing between the sensor and the internal part of the integrated circuit. If the component pin is not properly connected (faulty soldering) to the polygonal where the AC signal is connected, the width of measured signal is different from the one measured on the plate properly connected.
On bed of nails systems, fixed capacitive sensors are used, connected to specific channels to execute this kind of measurements. On flying probe systems a mobile capacitive sensor is use, and can be positioned at the scheduled coordinates of the working area. The figure below shows the two kinds of sensors.

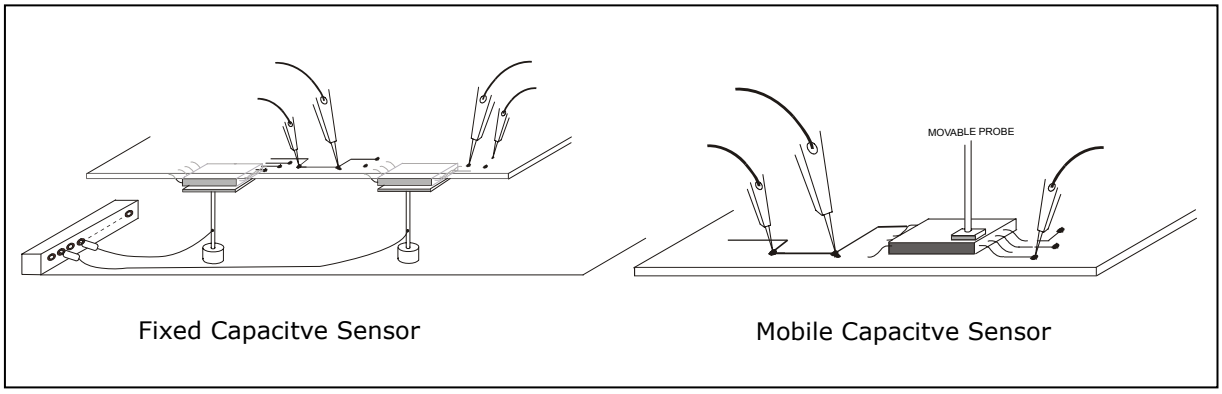

Fig. 2-9 - VIVA: OPENFIX, Fixed and Mobile capacitive Sensors

[10] For detailed information about the definition of vectorless technique, see the corresponding note in the chapter dedicated to AUTIC macro.

The voltage value used by the macro to perform the check is obtained executing the program in the "Autolearn" mode on a sample UUT. This execution is performed to acquire from UUT the value of main parameters related to measurements to be executed. This mode of execution is relevant only when sample UUTs are used, i.e. correctly operating. The acquired values are reliable if, after "Autolearn" mode execution, repeated execution in the "Normal" mode, with the same sample UUT, **always** give as a result: "PROGRAM PASS". Executions on other UUTs will give correct results only if the "Autolearn" mode execution, and subsequent checks in the "Normal" mode, have been made with the proper UUT.

Below, a synthetic description of the main macro parameters and optional parameters.

OPENFIX (Sensor, SensorCh, TestPin, RefPin, Value, TolPos, TolNeg, Quality, MeasureMode, TestResult, MeasureType, Recycle, Volt, Frequency, Time)

Main Parameters

Sensor: [0-64]
Indicates the channel connected to the capacitive sensor in use. Channels that can be connected to the capacitive sensor are special channels, different from system channels used to connect the system instruments to internal UUT nodes. At the hardware level, these channels are implemented on a maximum of 4 boards providing 16 channels each. If "Sensor" is = 0 the sensor in use is a mobile sensor present on flying probe systems, and the parameter "SensorCH" identifies the channel connected to the capacitive probe. The parameter "SensorCH" is not relevant when "Sensor" has a value different from 0.

SensorCh: [0-N]
Indicates the channel connected to the mobile capacitive sensor used by OPENFIX macro on flying probe systems. Channels connected to the mobile sensor are generated in the "Create Program" phase and correspond to virtual nodes of the UUT containing the capacitive sensor coordinates defined to optimize the capacitive sensor position with reference to the pin under check. The figure on the right of the page, shows an example to highlight: the channel (ch 1), the tested pin (pin 1) and the virtual channel (ch11) which identifies the channel connected to the mobile sensor and the coordinates of the central point of the sensor used. The parameter "SensorCH" is not relevant when "Sensor" has a value different from 0.

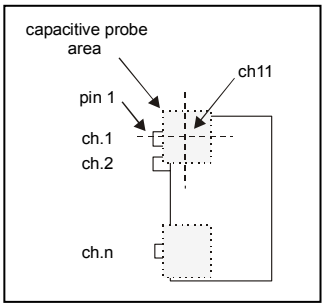

TestPin: [0-N]
Indicates the channel connected to the UUT point, connected to the integrated circuit pin, where the AC reference signal is injected. It is expressed as a whole number, with possible values included in the interval: 0-N. If "TestPin" is = 0, the macro is not executed.

RefPin: [1-N]
Indicates the channel connected to a point of the UUT, used as reference point for the signal injected on the point identified as "TestPin" and for the signal measured with the capacitive sensor. Usually, the reference point is the Ground signal (GND) present on the UUT. The parameter is expressed as a whole number, with possible values included in the interval 0-N. If "RefPin" is = 0, the macro is not executed.

Optional Parameters

Value: [0 -100 Volt]
Indicates the expected AC signal value measured on the capacitive sensor. It is expressed in Volts, with possible values included in the interval: 0-100.

TolPos: [0-100%]
Indicates the maximum positive tolerance accepted in the component measurement. It is expressed in %, with possible values included in the interval: 0-100. In the "Create Program" phase, this parameter is set to 80.

TolNeg: [0-100%]
Indicates the maximum negative tolerance accepted in the component measurement. It is expressed as a percentage, with possible values included in the interval: 0-100. In the "Create Program" phase, this parameter is set to 20.

Quality: [0-100%]
Indicates the measurement quality degree.
For further details on this parameter, see ***Quality*** *in chapter 2.1 "Parameters with common meaning to several system macros".*

MeasureMode: [RMS Low|AC Low| RMS High|AC High] DA ACL Module
Indicates the measurement mode and the range used to measure the signal read by the capacitive sensor. The possible values are:

RMS Low	*The instrument is set for a RMS measurement with low scale range value.*
AC Low	*The instrument is set for an AC peak to peak measurement with low scale range value.*
RMS High	*The instrument is set for a RMS measurement with high scale range value.*
AC High	*The instrument is set for an AC peak to peak measurement with high scale range value.*

TestResult: [Test Result|Force Pass|Force Fail|Force Skip]
Defines the kind of result obtained when executing the macro.
For further details on this parameter, see ***TestResult*** *in chapter 2.1 "Parameters with common meaning to several system macros".*

MeasureType: [Normal|Average|RecOnError|Maximum|Minimum|Programmed| Peak ToPeak]
Defines the kind of elaborations made by the macro on executed measurements.
For further details on this parameter, see ***MeasureType*** *in chapter 2.1 "Parameters with common meaning to several system macros".*

Recycle: [0-1.000.000]
Indicates how many times measurement is executed.
For further details on this parameter, see ***Recycle*** *in chapter 2.1 "Parameters with common meaning to several system macros"*

Volt: [0-100 V]
Indicates the width of the signal emitted by the generator connected to the UUT point identified with "TestPin".

Frequency: [0-100.000 Hz]
Indicates the frequency of the generator connected to the UUT point identified with "TestPin".

Time: [0-1 sec]
Indicates the measurement time. The possible values of this parameter are included in the interval: 0-1 and is expressed in seconds. If "Time" is = 0, the measurement time is not defined at macro level but at a lower level. ("Drivers" and "DSP environment" for internal instruments management). See Fig. 1-1.

2.22.1 Function OpenFix and system macro used

In the phase "Create Program", the VIVA software analyzes the function associated to each testable component and creates the macro instances that make up the function so that they can be executed in the "Run" phase of the testing program.

The function OpenFix is associated to OPENFIX macro but the creation process is different. The components having as associated function OpenFix, are listed in the section OPENFIX and, for every pin testable with OPENFIX macro, an execution instance is created and identified by the couple: <OPENFIX:i>, where i identifies the checked pin.
After instances <OPENFIX:i> which identify the component pins, the macro OPENFIX_PARSE is inserted and executed. The OPENFIX_PARSE macro calculates the average of all results obtained with the checks executed on the component pin; if this average value is different from the value acquired in the "Autolearn" mode, the displacement detected is applied to parameter "Value" of every pin before outputting the test final result.

As an example, the figure opposite shows the view obtained in the Debug Environment referred to a component (U3), with 57 pin to whom an OpenFix function has been associated. In this example, pin 57 is connected to GND, hence not checked with OPENFIX macro which uses GND signal as reference point, as identified by the parameter "RefPin".

```
Debug Environment
...
- OPENFIX
 +----- - U3
 |          +-- OPENFIX: 1
 |          +-- OPENFIX: 2
 |          +-- OPENFIX: 3
 |          ......
 |          .......
 |          +-- OPENFIX: 56
 |          +-- OPENFIX_PARSE
- JSCAN
 +----- - .....
```

2.23 CONTINUITY

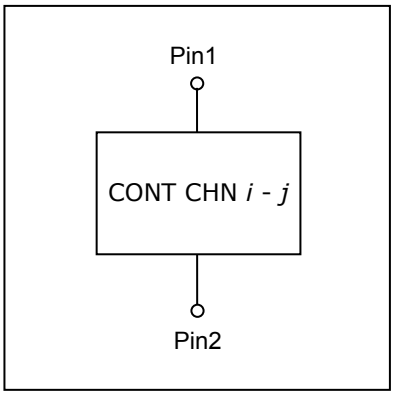

The CONTINUITY macro is used to check the electric continuity between two UUT points. It checks the value of resistance existing between the two points: if the measured value is lower than the reference value, the two points are considered as connected between them and the macro outputs a positive result. If the measured value is higher than the reference threshold, the two points are not considered in continuity between them and the macro outputs a negative result.
The resistive value taken as a reference is the one set in the field "Continuity", active after selecting the option "☑ Continuity" in the dialogue "Advanced Create Program Settings" in the page "Create Program", of the Wizard Environment.

In the "Create Program" phase is created the section: "CONTINUITY" which contains a list of virtual components identified with label: "CONT CHN *i* – *j*", where *i* and *j* identify the channels corresponding to the UUT points to be checked with CONTINUITY macro.

To execute measurements, the main parameters are those related to the expected value, to tolerances on this expected value and to system internal points (channels) where are connected the pins of the component to be tested. The optional parameters are related to the modes by which the macro executes the measurements.

Below, a synthetic description of macro parameters, considering the main parameters first and then the optional parameters.

CONTINUITY (Value, Pin1, Pin2, TestResult, MeasureType, Recycle, Time, Volt, CapPar)

Main Parameters

Value: [0 -100.000.000 Ohm]
Indicates the reference value used to check continuity between two UUT points connected to the channels indicated with "Pin1" and "Pin2". It is expressed in Ω, with possible values included in the interval: 0-100.000.000. The generator and meter used for the measurement, are set according to the expected value indicated with "Value".

Pin1: [0-N]
Indicates the channel connected to one of the two UUT points for which the continuity is to be checked. The parameter is expressed as a whole number, with possible values included in the interval: 0-N. If "Pin1" is= 0, the macro is not executed.

Pin2: [0-N]
Indicates the channel connected to the other UUT point for which continuity is to be checked. The parameter is expressed as a whole number, with possible values included in the interval: 0-N. If "Pin2" is= 0, the macro is not executed.

Optional Parameters

TestResult: [Test Result|Force Pass|Force Fail|Force Skip]
Defines the kind of result obtained when executing the macro.
*For further details on this parameter, see **TestResult** in chapter 2.1 "Parameters with common meaning to several system macros".*

MeasureType: [Normal|Average|RecOnError|Maximum|Minimum|Peak ToPeak]
Defines the kind of elaborations made by the macro on executed measurements.
*For further details on this parameter, see **MeasureType** in chapter 2.1 "Parameters with common meaning to several system macros".*

Recycle: [0-1.000.000]
Indicates how many times measurement is executed.
For further details on this parameter, see ***Recycle*** *in chapter 2.1 "Parameters with common meaning to several system macros".*

Time: [0-1 sec]
Indicates measurement time. This parameter is relevant if the generator in use is a DC generator, i.e. if "MeasureMode" is set to DC_ACTIVE or DC_PASSIVE. The possible values for this parameter are included in the interval: 0-1 and it is expressed in seconds. If "Time" is= 0, measurement time is not defined at the macro level but at a lower level. ("Drivers" and "DSP environment" for internal instruments management). See Fig. 1-1.

Volt: [0 -100 Volt]
Indicates the voltage value used for resistive measurement executed to check the continuity between two UUT points. The possible values for the parameter are included in the interval: 0-100 and it is expressed in Volt.

CapPar: [0-1 Farad]
Indicates the capacitive value in parallel to the two UUT points for which continuity is to be checked. The parameter is expressed in Farad, with possible values included in the interval 0-1. The VIVA software determines the value of this parameter when creating the program or when the program is executed in the "Autodebug" or "Autolearn" mode. It can be modified manually from Debug Environment.

2.24 ISOLATION

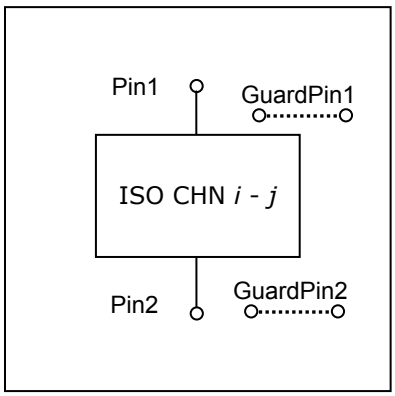

The ISOLATION macro is used to check electric insulation between two UUT points. This macro checks the resistive value existing between the two points: if the measured value is higher than the reference values, the two points are considered as insulated and the macro outputs a positive result. If the measured value is lower than the reference threshold, the two points are not considered as insulated and the macro outputs a negative result.
The resistive value taken as a reference is the one set in the field "Isolation", active after selecting the option "☑ Isolation" in the dialogue "Advanced Create Program Settings" in the page "Create Program", of the Wizard Environment. The adjacent field to the resistive value indicates the voltage value emitted by the internal generator to execute the measurement.

In the phase "Create Program" is created the section: "ISOLATION" which contains a list of virtual components identified with the label: "ISO CHN *i* – *j*", where *i* and *j* identify the channels corresponding to UUT points checked with macro ISOLATION.

To execute measurements, the main parameters are related to the expected value, to tolerances on the expected value and to system internal points (channels) where are connected the pins of the component to be checked. The optional parameters are related to the modes by which the macro executes the measurements.

Below, a synthetic description of macro parameters, considering the main parameters first and then the optional parameters.

ISOLATION **(Value, Pin1, Pin2, GuardPin1, GuardPin2, Wire, TestResult, MeasureType, Recycle, Time, Volt, CapPar, ResGuardPin1, CapGuardPin1, ResGuardPin2, CapGuardPin2)**

Main Parameters

Value: [0 -100.000.000 Ohm]
Indicates the reference value used to check insulation between two UUT points connected to the channels indicated with "Pin1" and "Pin2". The parameter is expressed in Ω, with possible values included in the interval: 0-100.000.000. The generator and meter used for the measurement are set according to the expected value indicated with "Value".

Pin1: [0-N]
Indicates the channel connected to one of the two UUT points for which insulation is to be checked. The parameter is expressed as a whole number, with possible values included in then interval: 0-N. If "Pin1" is = 0, the macro is not executed.

Pin2: [0-N]
Indicates the channel connected to the other UUT point for which insulation is to be checked. The parameter is expressed as a whole number, with possible values included in the interval: 0-N. If "Pin2" is = 0, the macro is not executed.

Optional Parameters

GuardPin1: [List of numbers included in the interval 0-N]
Indicates the channels connected to UUT points which, through the "Guarding Generator" and the "Active Guarding" technique, allows to insulate electrically the component under test to execute the measurement. The numbers listed are included between 0 and N. If "GuardPin1" is= 0, no channel is in use.

GuardPin2: [List of numbers included in the interval 0-N]
Indicates the channels connected to UUT points which, through the "Guarding Generator" and the "Passive Guarding" technique, allows to insulate electrically the component under test to execute the measurement. The numbers listed are included between 0-N. If "GuardPin2" is = 0, no channel is in use.

Wire: [Auto|2 WIRE|3 WIRE]
Indicates the number of wires (or channels) used for measurement. The possible values are:

Auto	*The number of wires in used is not specified. When executing the program the VIVA software will determine the suitable number of wires to execute the measurement.*
2 WIRE	*A 2-wire measurement is executed: the meter is connected to the same channels used by the generator.*
3 WIRE	*A 3-wire measurement is executed: it is the same as the 2-wire with a third wire used for the guarding.*

TestResult: [Test Result|Force Pass|Force Fail|Force Skip]
Defines the kind of result obtained when executing the macro.
For further details on this parameter, see ***TestResult*** *in chapter 2.1 "Parameters with common meaning to several system macros".*

MeasureType: [Normal|Average|RecOnError|Maximum|Minimum|Peak ToPeak]
Defines the kind of elaborations made by the macro on executed measurements.
For further details on this parameter, see ***MeasureType*** *in chapter 2.1 "Parameters with common meaning to several system macros".*

Recycle: [0-1.000.000]
Indicates how many times measurement is executed
For further details on this parameter, see ***Recycle*** *in chapter 2.1 "Parameters with common meaning to several system macros".*

Time: [0-1 sec]
Indicates measurement time. This parameter is relevant if the generator in use is a DC generator, i.e. "MeasureMode" is set to DC_ACTIVE or DC_PASSIVE. The possible values for this parameter are included in the interval: 0-1 and it is expressed in seconds. If "Time" is = 0, measurement time is not defined at macro level but at a lower level. ("Drivers" and "DSP environment" for internal instruments management). See Fig. 1-1.

Volt: [0 -100 Volt]
Indicates the voltage value used for the resistive measurement executed to check insulation between the two UUT points. The possible values of this parameter are included in the interval: 0-100 and it is expressed in Volt.

CapPar: [0-1 Farad]
Indicates the capacitive value in parallel to the two UUT points for which insulation is to be checked. This parameter is expressed in Farad, with possible values included in the interval: 0-1. The VIVA software determines the value of this parameter when creating the program or when the program is executed in the "Autodebug" or "Autolearn" mode. The parameter can be modified manually from Debug Environment.

ResGuardPin1: [0-100.000.000 Ohm]
Indicates the expected resistive value of the surrounding components (Z_{G1} of Fig. 1-6*) which, if not insulated, can absorb part of the current supplied by the generator. The parameter is expressed in Ohm, with possible values included in the interval: 0-100.000.000. If "ResGuardPin1" is = 0, this means: inactive parameter.*

CapGuardPin1: [0-1 Farad]
Indicates the expected capacitive value of the surrounding components (Z_{G1} of Fig. 1-6) which, if not insulated, can absorb part of the current supplied by the generator. The parameter is expressed in Farad, with possible values included in the interval: 0-1. If "CapGuardPin1" is=0, this means: inactive parameter.

ResGuardPin2: [0-100.000.000 Ohm]
Indicates the expected resistive value of the surrounding components (Z_{G2} of Fig. 1-6*) which, if not insulated, can have a circulation of current in a way that the current value detected by the meter differs from the current value circulating in Z_X. The parameter is expressed in Ohm, with possible values included in the interval: 0-100.000.000. If "ResGuardPin2" is=0, this means: inactive parameter.*

CapGuardPin2: [0-1 Farad]
Indicates the expected capacitive value of the surrounding components (Z_{G2} of Fig. 1-6*) which, if not insulated, can have a circulation of current in a way that the value of current detected by the meter differs from the value of current circulating in Z_X. The parameter is expressed in Farad, with possible values included in the interval: 0-1. If "CapGuardPin2" is = 0, this means: inactive parameter.*

2.25 SHORT

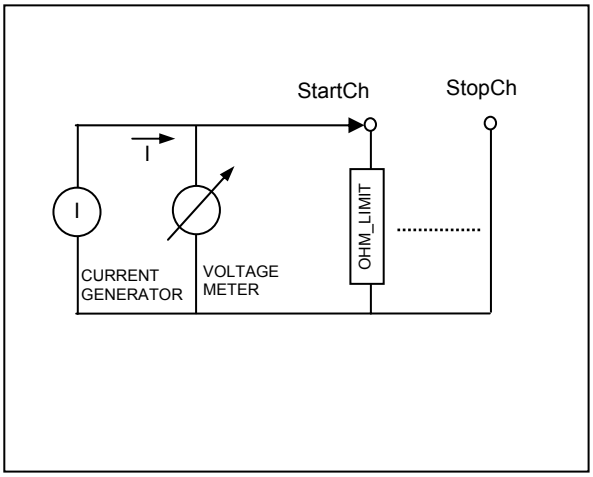

The SHORT macro is used on **bed of nails systems**, to check whether the specified channels into instruction parameters are in short-circuit between them.
With the instruction, the following operations are executed:

1. All the channels to be checked are connected to a common reference point.
2. Each channel to be checked is disconnected from the common reference point, stimulated by a current generator and measured with a voltage meter to measure resistance between the tested channel and the common reference point.
3. If the measured value is higher than a threshold value defined in the instruction activation parameters, the process continues on the following channel; if it is detected an impedance value lower than the declared, the process still goes on but this channel is recorded internally.
4. All measurements indicated at point 2 are executed (for channels recorded at point 3). Through a comparison of the measured values it is possible to determine the channels in short-circuit between them.

The resistive value taken as a reference is the one set in the field "Short Test", active soon after selecting the option "☑ Short Test[11]" in the dialogue "Advanced Create Program Settings" in the page "Create Program", of the Wizard Environment. The adjacent field to the resistive value indicated the voltage value emitted by the internal generator to execute the measurement.

In the "Create Program" phase is created the section: "SHORT" which contains the virtual component identified with label: "SHORT_COMP" checked by the SHORT macro.

To execute the measurements, the main parameters are those related to the expected value, to tolerances on the expected value and to system internal points (channels) where the pins of the component to be tested are connected. The optional parameters are related to the modes by which the macro executes the measurements.

Below, a synthetic description of macro parameters, considering the main parameters first and then the optional parameters.

SHORT (StartCh, StopCh, FamilyNr, Value, TestResult, Time, Volt, ViewChannel)

Main Parameters

StartCh: [0-N]
Indicates the first channel of the group of channels for which the existence of short-circuits is to be checked. The parameter is expressed as a whole number, with possible values included in the interval: 0-N. If "StartCh" is = 0, the macro is not executed.

StopCh: [0-N]
Indicates the last channel of the group of channels for which the existence of short-circuits is to be checked. The parameter is expressed as a whole number, with possible values included in the interval: 0-N. If "StopCh" is = 0, the macro is not executed.

[11] On flying probe systems, this field label is "Isolation"

FamilyNr: [0-N]
indicates the family number in which the set of the channels checked through macro SHORT is divided. A family identifies the channels having common features and therefore require specific values for the parameters which define the execution mode on these channels. These parameters are: "Time", "Value" and "Volt". Using the button "View MEMO Parameters" in the "Macro View" page, available in the Debug Environment, it is possible to view the families indicated, and view and change the parameters of each family. If "FamilyNr" has value "0" or "1" with button "View MEMO Parameters" it is possible to view and/or modify the "Family1" parameters. If "FamilyNr" has value "*i*", the button "View MEMO Parameters" allows to view and/or modify the parameters from "Family1" to Family*i*".

Optional Parameters

Value: [3 -100.000.000 Ohm]
Indicates the minimum resistive value expected during the short-circuit check of the channel. If the measured value is higher than the value indicated in this parameter, the channel is considered as non short-circuited. For lower values, the channel is considered as short-circuited. The parameter is expressed in Ω, with possible values included in the interval:3-100.000.000. The generator and meter used for the measurement are set according to the value of this parameter and of the one defined with [V].

TestResult: [Test Result|Force Pass|Force Fail|Force Skip]
Defines the kind of result obtained when executing the macro.
For further details on this parameter, see ***TestResult*** *in chapter 2.1 "Parameters with common meaning to several system macros".*

Time: [0-1 sec]
Indicates the measurement time. This parameter is relevant if the generator used is a DC generator, i.e. if "MeasureMode" is set to DC_ACTIVE or DC_PASSIVE. The possible values are included in the interval: 0-1 and it is expressed in seconds. If "Time" is = 0, the measurement time is not defined at the macro level but at a lower level. ("Drivers" and "DSP environment" for internal instruments management). See Fig. 1-1.

Volt: [0 -100 Volt]
Indicates the voltage value used for the resistive measurement executed to check isolation between the two UUT points. The possible values for this parameter are included in the interval: 0-100 and it is expressed in Volts.

ViewChannel: [1-N]
Indicates the channel for which the value of the executed measurement is displayed on the analog-digital indicator shown in the page "Program" when executing the macro.

2.25.1 Function “Short” “MEMO Parameters” for SHORT macro

On bed of nails systems, the VIVA software creates the section “SHORT” when creating the program if in the dialogue “Advanced Create Program Settings” the option:
☑ Short Test [yy] [Ω] [zz] [V] has been selected.
In the “SHORT” section the macro SHORT is executed with parameters “Value” and “Volt” set to values “yy” and “zz”. Usually the SHORT macro is executed on all channels scheduled for the UUT test.
Exceptions to this rule can be managed through the “MEMO Parameters” associated to the SHORT macro.

The management of exceptions when executing the SHORT macro is performed through a dialogue which can be activated with “View MEMO Parameters” button in the page “Macro View”.

1. For each family it is possible to set:
   - The list of channels making up the family
   - Values for “Time”, “Value” and “Volt” to be applied when checking the family of channels
2. In the family named “Excluded” it is possible to set the list of the channels excluded from the check made with the SHORT macro.
3. In the family named “Linked”, it is possible to set the list of channel groups containing short-circuited channels, which, if not specified could cause a negative result when executing the SHORT macro.

As for the syntax used to fill the groups of channels, it is necessary to keep in mind the following rules:

- Use character “/” to indicate an adjacent group of channels
- Use character “-” to indicate non adjacent channels
- Use character “,” to separate groups of channels

Remember that channels short-circuited between them must be listed in the “Linked” family groups and not in the “Excluded” family groups. In fact:

- For the channels included in the “Excluded” family groups no check is executed by the macro SHORT.
- For the channels included in the “Linked” family groups no checks are executed for channels belonging to the same group, but are executed checks between channels belonging to the group and the channels not belonging to the group.

Aside is reproduced a view you can obtain with the “View MEMO Parameters” button, related to the following test settings:

- Channels from 41 to 50, from 60 to 70, from 200 to 250 and channels: 120, 130, 170, 300, 330 and 370 must not be checked.
- Channels: from 15 to 20; 31, 39, and 40, must be checked using parameters: “Time”:=0.25, “Value”:=3000 and “volt”:=5.
- Channels: from 400 to 410, must not be checked between them.
- Channels: from 430 to 443, must not be checked between them.
- Channels: from 450 to 470 and channel 485, must not be checked between them.

Name	Value
- **Excluded**	
|___ **Channels1**	**41/50,60/70**
|___ **Channels2**	**120-130-170**
|___ **Channels3**	**200/250-300-330-370**
+ **Family1**	
- **Family2**	
|___**Channels**	**15/20-31-39-40**
|___**Time**	**0.25**
|___**Value**	**3000**
|___**Volt**	**5**
- **Linked**	
|___**Channels1**	**400/410,430-443**
|___**Channels2**	**450/470-485**
|___**Channels3**	0

2.26 CONTACT

The CONTACT macro is used on **bed of nails systems** to check contact between the fixture test channels and UUT points to be tested.
When the instruction is executed, the following operations are carried out:

1. All the channels to be checked are connected to a common reference point.
2. Each channel to be checked is disconnected from the common reference point, stimulated by a current generator and measured with a voltage meter to measure resistance between the tested channel and the common reference point.
3. If the measured value, which corresponds to the impedance existing between the measured channel and the reference point, is lower than the threshold value defined in the parameters of the instruction itself there's good contact.
4. If the measured value is higher than the threshold value, then there is not good contact.

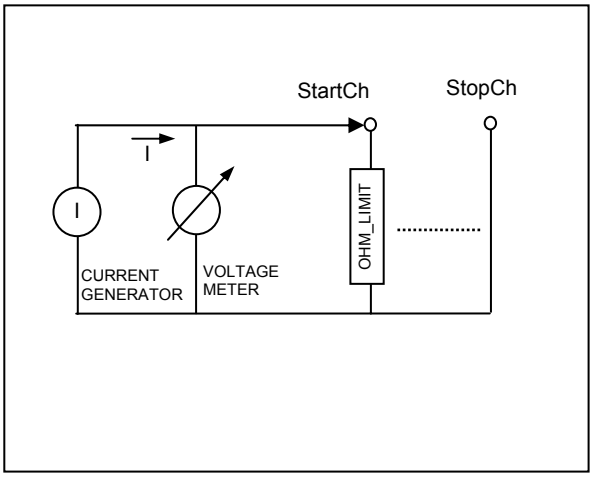

The resistive value taken as a reference is the one set in the field "Contact Test", active after selecting the option "☑ Contact Test[12]" in the dialogue "Advanced Create Program Settings" in the tag "Create Program", of the "Wizard Environment".

In the phase "Create Program" the section "CONTACT" is created. It contains the virtual component identified with label: "CONTACT_COMP" checked with the macro CONTACT.

To execute the measurements, the main parameters are related to the expected value, to tolerances on the expected value and to the internal points of the system (channels) where the pins of the component to be tested are connected. The optional parameters are related to the modes by which the macro executes measurements.

Here below, we provide a synthetic description of the macro parameters, considering the main parameters first and then the optional parameters.

CONTACT (StartCh, StopCh, FamiliNr, Value, TestResult, Time, Volt, ViewChannel)

Main parameters

StartCh: [0-N]
Indicates the first channel of the group of channels for which the contact to the UUT is to be verified. The parameter is expressed as a whole number, with possible values included in the interval: 0-N. If "StartCh" is = 0, the macro is not executed.

StopCh: [0-N]
Indicates the last channel of the group of channels for which the contact to the UUT is to be verified. The parameter is expressed as a whole number, with possible values included in the interval: 0-N. If "StopCh" is =0, the macro is not executed.

[12] On flying probe systems, the label of this field is "Coninuity"

FamilyNr: [0-N]
Indicates the number of families into which is divided the set of channels verified with the macro CONTACT. A family identifies the channels that have common features and therefore need specific values for the parameters defining the execution mode of the check on the channels of the same family. These parameters are: "Time", "Value" and "Volt". Using the button "View MEMO Parameters" in the tag "Macro View" available in Debug Environment, it is possible to view the families defined, to view and/or modify the parameters associated to each family. If the parameter "FamilyNr" has value "0" or "1", using the button "View MEMO Parameters" it is possible to view and/or modify the parameters of family "Family1". If the parameter "FamilyNr" has value "*i*", using the button "View MEMO Parameters" it is possible to view and/or modify the parameters of families included between "Family1" and "Family*i*".

Optional parameters

Value: [1.000 -100.000.000 Ohm]
Indicates the maximum resistive value expected during the check of contact for the channel. For a measured value lower than the value defined with parameter "Value" the contact is considered as good. For higher values the contact is considered as not sufficient. The parameter is expressed in Ω, with possible values included in the interval: 1.000-100.000.000. The generator and the meter in use for measurement are set according to the value of this parameter and the value indicated with parameter "Volt"

TestResult: [Test Result|Force Pass|Force Fail|Force Skip]
Defines the kind of result obtained when executing the macro.
For further details on this parameter, see ***TestResult*** *in chapter 2.1 "Parameters with common meaning to several system macros".*

Time: [0-1 sec]
Indicates measurement time. This parameter is relevant if the generator in use is a DC generator, i.e. if the parameter "MeasureMode" is set with values DC_ACTIVE or DC_PASSIVE. Possible values are included in the interval: 0-1 and is expressed in seconds. If "Time" is= 0, the measurement time is not defined at the macro level but at a lower level. ("Drivers" and "DSP environment" for internal instruments management). See Fig. 1-1.

Volt: [0 -100 Volt]
Indicates the voltage value used for resistive measurement executed to check isolation between two UUT points. The possible values for this parameter are included in the interval: 0-100 and is expressed in Volts. If "Volt" is = 0, the voltage value is not defined at the macro level but at a lower level. ("Drivers"and "DSP environment" for internal instruments management). See Fig. 1-1.

ViewChannel: [1-N]
Indicates the channel for which is displayed the value of executed measurement on the digital-analog indicator shown in the page "Program", during the macro execution.

2.26.1 Function “Contact” “MEMO Parameters” for macro CONTACT

On bed of nails systems, the VIVA software creates the section “CONTACT” when creating the program, if in the dialogue “Advanced Create Program Settings” the option:
☑ Contact Test [yy] [Ω] has been selected.
In the section “CONTACT” the CONTACT macro will be executed with parameter “Value” set to value “yy”.
The CONTACT macro is usually executed on all the channels scheduled for UUT test.
Exceptions to the rule can be managed through “MEMO Parameters” associated to the macro CONTACT.

It is possible to manage the exceptions when executing the macro CONTACT, through the dialogue which can be activated using the button “View MEMO Parameters” in the page “Macro View”.

1. For each family it is possible to set:
   - The list of channels that make up the family
   - The value of parameters “Time”, “Value” and “Volt” to be applied when checking the channels of the family
2. In the family named “Excluded” it is possible to define the list of channels not included in the check executed through the macro CONTACT.

With regard to the syntax to be used to fill in the groups of channels, it is important to remind the following rules:

- Use character “/” to indicate an adjacent group of channels
- Use character “-” to indicate non adjacent channels
- Use character “,” to divide groups of channels

On the side of the page is reproduced a view which can be obtained with button “View MEMO Parameters” referred to the following settings:

- Channels from 41 to 50, from 60 to 70, from 200 to 250 and channels: 120, 130, 170, 300, 330 and 370 must not be checked.
- Channels: from 15 to 20, 31, 39, and 40, must be checked using parameters: “Time”:=0.25, “Value”:=3000 and “volt”:=5.

Name	Value
- **Excluded**	
|___ **Channels1**	**41/50,60/70**
|___ **Channels2**	**120-130-170**
|___ **Channels3**	**200/250-300-330-370**
+ **Family1**	
- **Family2**	
|___**Channels**	**15/20-31-39-40**
|___**Time**	**0.25**
|___**Value**	**3000**
|___**Volt**	**5**

2.27 COMPARATOR

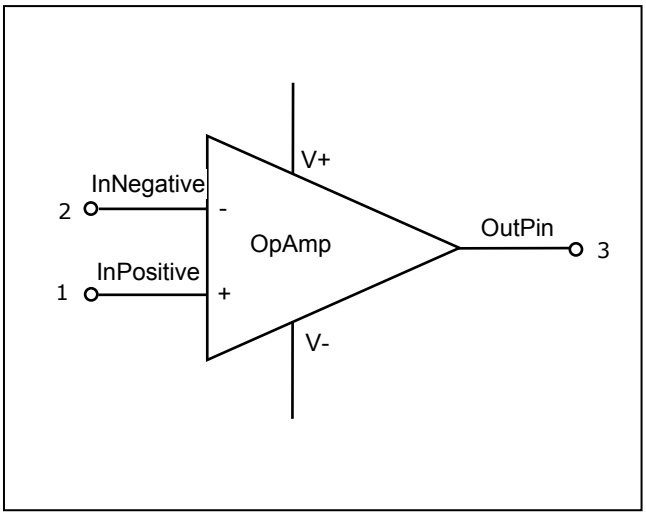

The COMPARATOR macro is used to check components of the Operational Amplifier kind (OpAmp) present on the UUT. The operational Amplifier is a DC coupled high gain amplifier. The operational amplifier can be used in different modes of application: non-inverting amplifier, inverting amplifier, differential amplifier, voltage follower or buffer, comparator, oscillator, active filter, etc. .
With the VIVA SW three system macros are available to check the main operating modes of an operational amplifier:

- Comparator (COMPARATOR)
- Amplifier (OP_AMP_VF)
- Voltage follower (OP_AMP_GAIN)

For other application modes related to the use of an operational amplifier, the user will have to develop the specific macro to check the specific modality of use of the operational amplifier.
When creating the program, the function "OpAmp", available with VIVA software, schedules the execution of the three macros to check the components associated to the function "OpAmp". The user shall develop, after creating the program, the choice of the macro corresponding to the circuitry configuration of the amplifier on the UUT disabling the execution of the other two.

The macro COMPARATOR is used to check the functionality of an operational amplifier used in the mode voltage comparator. This operating mode allows to compare the value of voltage levels applied to the two inputs. The output will have a voltage value near to the positive voltage of power if the non inverting input has an higher voltage than the inverting input. Otherwise the output will have a voltage near to the negative power.

The macro COMPARATOR is a component of "OpAmp" function and is executed as an alternative to the other macros that make up the function "OpAmp", for components scheduling the use of "OpAmp" function for their check.

To execute the COMPARATOR macro, the component must be powered, hence the macro execution must be preceded by section "POWERON" to turn on the power supplies[13]: V+ and V-.

To execute the checks, the main parameters are related to the functionality of the component to be checked and to the internal points of the system (channels) where the pins of the component to be tested are connected. The optional parameters are related to the modes by which the macro executes measurements.

Here below, we provide a synthetic description of the macro parameters, , considering the main parameters first and then the optional parameters.

COMPARATOR **(Name, ModuleType, TolPos, TolNeg, InPositive, InNegative, GndPin, OutPin, ClusterName, ValueHigh, ValueLow, Gain, TestResult, MeasureType, Recycle, Frequency, InCurrent, DeltaVPlus, DeltaVMinus, OffsetV, Quality, SettlingWave, V_Drop, ValueVcc, ValueVdd, View, ViewMeas)**

[13] On components data sheets the two voltages V+ and V- are sometimes indicated as Vcc and Vdd or Vee and Vss.

Main parameters

Name:
Indicates the name of the component to be tested. The component name is the first element of the couple which identifies the node on the UUT: <ComponentName-PinNumber>. If the component is associated to a complex device, the parameter "Name" has value: "ComponentName#*i*", where *i* identifies the part "SUBi" of the complex device.

ModuleType: [NONE|VL|VBS|VL_DYNAMIC]
Identifies the kind of macro used, i.e. the language used to develop the macro. The possible values are:

NONE	The macro in use is written with VIVA native language.
VL	The macro in use is written in VIVA Language (VL). The macro is executed in a static mode. This is the default value for the "COMPARATOR" macro.
VBS	The macro in use is written in Visual Basic Script. (VBS).
VL_DYNAMIC	The macro in use is written in VIVA Language Dynamic (VL_DYNAMIC). The macro is executed in the dynamic mode.

TolPos: [0-100%]
Indicates the maximum positive tolerance accepted in the component measurement. The parameter is expressed as a percentage, with possible values included in the interval 0-100.

TolNeg: [0-100%]
Indicates the maximum negative tolerance accepter in the component measurement. The parameter is expressed as a percentage, with possible values included in the interval: 0-100.

InPositive: [0-N]
Indicates the channel connected to the positive input terminal of the component to be measured, where positive is the terminal of the **non inverting** input of the component connected to the generator which stimulates the component by injecting current or by applying voltage. The parameter is expressed as a whole number, with possible values included in the interval: 0-N. If "InPositive" is =0, the macro is not executed.

InNegative: [0-N]
Indicates the channel connected to the negative input terminal of the component to be measured, where negative is the terminal of the **inverting** input of the component connected to the generator which stimulates the component by injecting current or by applying voltage. The parameter is expressed as a whole number, with possible values included in the interval: 0-N. If "InNegative" is=0, the macro is not executed.

GndPin: [0-N]
Indicates the channel connected to the ground terminal (GND) of the UUT containing the component to be measured. The parameter is expressed as a whole number, with possible values included in the interval: 0-N. If "GndPin" is=0, the macro is not executed.

OutPin: [0-N]
Indicates the channel connected to the output terminal of the component to be measured. The parameter is expressed as a whole number, with possible values included in the interval: 0-N. If "OutPin" is=0, the macro is not executed.

Optional parameters

ClusterName: [String]
Indicates the name of the cluster used to encode the macro. In the VL environment the word cluster indicates the code included between the instructions START "ClusterName" " Cluster Parameters….; and ENDTEST;. For the COMPARATOR macro, the default value of this parameter is: "Comparator", which identifies the part of code developed in VL to check the optoisolator components.

ValueHigh: [-100 -100 Volt]
*Indicates the voltage value expected on the output terminal, connected to the channel indicated with parameter "OutPin", when the voltage level present on the non inverting input is **higher** than the one present on the inverting input.*

ValueLow: [-100 -100 Volt]
Indicates the voltage value expected on the output terminal, connected to the channel indicated with parameter "OutPin", when the voltage level present on the non inverting input is ***lower*** *than the one present on the inverting input.*

Gain: [1-10.000]
Indicates the operational amplifier gain.

TestResult: [Test Result|Force Pass|Force Fail|Force Skip]
Defines the kind of result obtained when executing the macro.
For further details on this parameter, see ***TestResult*** *in chapter 2.1 "Parameters with common meaning to several system macros.*

MeasureType: [Normal|Average|RecOnError|Maximum|Minimum|Peak ToPeak]
Defines the kind of elaborations made by the macro on executed measurements.
For further details on this parameter, see ***MeasureType*** *in chapter 2.1 "Parameters with common meaning to several system macros".*

Recycle: [0-1.000.000]
Indicates how many times measurement is executed
For further details on this parameter, see ***Recycle*** *in chapter 2.1 "Parameters with common meaning to several system macros*

Frequency: [0-100.000 Hz]
Indicates the frequency of generators connected to the two input terminals of the component indicated with parameters "InPositive" and "InNegative".

InCurrent: [0-0,5 A]
Indicates the value of current injected to the pins corresponding to the two input terminals of the component to be measured. The parameter is expressed in A, with possible values included in the interval: 0-0,5.

DeltaVplus: [0-10 V]
Indicates the range of voltage values applied on the input terminal identified with parameter "InPositive". The parameter is expressed in V, with possible values included in the interval: 0-10.

DeltaVMinus: [0-10 V]
Indicates the range of voltage values applied on the input terminal identified with parameter "InNegative". The parameter is expressed in V, with possible values included in the interval 0-10.

OffsetV: [-10-10 V]
Indicates the average voltage value round which the two signals applied on the input terminals vary. The value of "OffsetV" must be included in the interval defined with parameters "ValueVdd" and "ValueVcc". Besides, the following bonds must be observed:
"OffsetV"+"DeltaVplus" ≤ "ValueVcc" and *"OffsetV"-"DeltaMinus" ≥ "ValueVdd"*
The parameter "OffsetV" is not relevant when it has value: –1000; in this case the value of parameter "OffsetV" will have value: $OffsetV = \frac{ValueVcc - ValueVdd}{2}$.

Quality: [0-100%]
Indicates the quality average of the measurement.
For further details on this parameter, see ***Quality*** *in chapter 2.1 "Parameters with common meaning to several system macros".*

SettlingWave: [0-100]
This parameter allows to modify the delay time before acquiring the sample measurements. It is expressed as a whole number with possible values included in the interval: 0-100. The number of waveforms output before measurement corresponds to the value indicated with parameter "SettlingWave" divided by ten. (e.g.. if "settlingWave" is="83", 8 waveforms will be output before executing measurement). Usually, after stimulating the component to be measured, a delay time is required before measurements are begun, to exit the initial temporary regimes due to existence of parasite capacities and inductances both in the module containing the instruments of measure and in the UUT. By increasing the value of "SettlingWave", the delay time increases as well and the accuracy of measurement is improved. Of course, the time needed to execute the measurement increases as well.

V_Drop: [-100 -100 Volt]
Indicates the voltage drop value existing between the two values indicated by parameters "ValueHigh" and "ValueLow" and the corresponding voltage values that power the component, indicated with parameters: "ValueVcc and "ValueVdd". The parameter "V_Drop" ***is relevant only*** *when the value of parameters "ValueHigh" and "ValueLow" is= –1000 to indicate they are not relevant.*

ValueVcc: [-100 -100 Volt]
Indicates the voltage value "V+" to be used to power the component. The parameter "ValueVcc" ***is relevant only*** *when the value of parameters "ValueHigh" and "ValueLow" is –1000 to indicate that they are not relevant*

ValueVdd[-100 -100 Volt]
Indicates the voltage value "V-"to be used to power the component. The parameter "ValueVdd" ***is relevant*** *only when the value of parameters "ValueHigh" and "ValueLow" is –1000 to indicate that they are not relevant.*

View [0|1|2]
Defines the kind of scale represented by the chart displayed in the page "Oscilloscope", which can be selected in the Debug Environment. The possible values for this parameter are:

- ***0*** *The scale represented on the x axis of the chart displayed corresponds to the time while the y axis is the value of the signal measured on the output terminal identified with parameter ""OutPin".*
- ***1*** *The scale represented on the x axis of the chart displayed is the time and the y axis is the value of the signal measured on the input terminal identified with parameter ""InPositive".*
- ***2*** *The scale represented on the x axis of the chart displayed is the time and the y axis is the value of the signal measured on the input terminal identified with parameter "InNegative".*

ViewMeas [HIGH|LOW]
Defines the kind of scale displayed on the analog-digital indicator shown in the page "Program.
The possible values are:

- ***HIGH*** *Is displayed the voltage value measured when on the two component inputs are applied voltage levels which should provoke on the output terminal the expected voltage value indicated with parameter "ValueHigh".*
- ***LOW*** *Is displayed the voltage value measured when on the two component inputs are applied voltage levels which should provoke on the output terminal the expected voltage value indicated with parameter "ValueLow".*

2.28 OP_AMP_VF

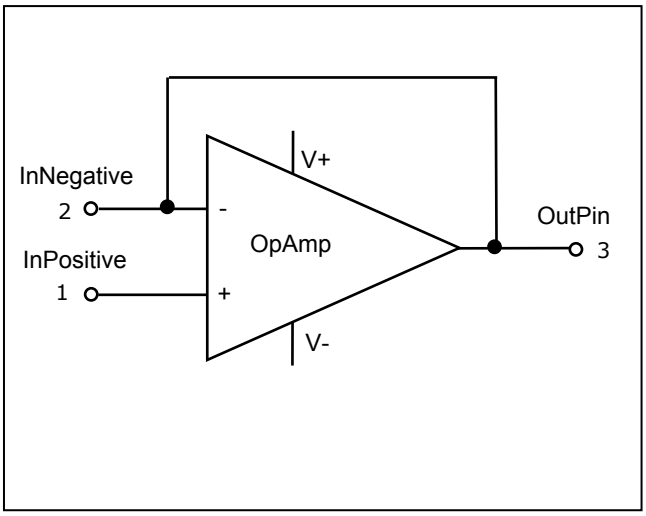

The macro OP_AMP_FV is used to check the operational amplifier kind components (OpAmp) present on the UUT. The operational amplifier is a DC-coupled high gain differential amplifier. The operational amplifier can be used in different modes of application: non-inverting amplifier, inverting amplifier, differential amplifier, voltage follower or buffer, comparator, oscillator, active filter etc.
With the VIVA Software three system macros are available to check the main operating modes of an operational amplifier:

- Comparator (COMPARATOR)
- Amplifier (OP_AMP_VF)
- Voltage follower (OP_AMP_GAIN)

For other application modes related to the use of an operational amplifier, the user will have to develop the specific macro to check the specific mode of use of the operational amplifier.
When creating the program, the function "OpAmp", available with VIVA SW, schedules the execution of these three macros to check the components associated to the function "OpAmp". The developer, after creating the program, will have to chose the macro corresponding to the circuitry configuration of the amplifier on the UUT disabling the execution of the other two macros.

The macro OP_AMP_FV is used to check the functionality of an operational amplifier used in the mode buffer or voltage follower. This operating mode allows to force a voltage level output equal to the voltage level applied on the non-inverting input terminal.

The macro OP_AMP_FV is a component of the function "OpAmp" and is executed, as an alternative to the other macros that make up the function "OpAmp", for the components which schedule the use of "OpAmp" function for their check.

To execute the OP_AMP_FV macro, the component must be powered, hence the macro execution must be preceded by the section "POWERON" to turn on the power supplies supplying [14]: V+ and V-.

To execute the checks, the main parameters are related to the functionality of the component to be checked and to the internal points of the system (channels) where the pins of the component to be tested are connected. The optional parameters are related to the modes by which the macro executes the measurements.

Here below, a synthetic description of the macro parameters describing the main parameters first and then the optional parameters.

OP_AMP_FV **(Name, ClusterName, ModuleType, TolPos, TolNeg, InPositive, InNegative, GndPin, OutPin, Value, TestResult, MeasureType, Recycle, Frequency, InCurrent, InVolt, OffsetV, Quality, SettlingWave, View)**

Main parameters

Name:
Indicates the name of the component to be tested. The component name is the first element of the couple which identifies the node present on the UUT: <ComponentName-PinNumber>. If the component is associated to a complex device, the parameter "Name" will have the value: "ComponentName#*i*", where *i* identifies the part "SUBi" of the complex device.

[14] On the data sheets of the components, the two voltages V+ and V- are sometimes indicated as Vcc and Vdd or Vee and Vss.

ClusterName: [String]
Indicates the name of the cluster used to encode the macro. In the VL environment, the word "cluster" indicates the code included between the two instructions: START "ClusterName" " Cluster Parameters….; and ENDTEST;. For OP_AMP_VF macro the default value of the parameter is: "opafollow", which identifies the part of code developed in VL to check the optoisolator components.

ModuleType: [NONE|VL|VBS|VL_DYNAMIC]
Identifies the kind of macro used, i.e. the language used to develop the Macro. The possible values are:

NONE	The macro in use is written with VIVA Native Language.
VL	The macro in use is written in VIVA Language (VL). The macro is executed in a static mode. This is the default value for "OP_AMP_VF" macro.
VBS	The macro in use is written in Visual Basic Script. (VBS).
VL_DYNAMIC	The macro in use is written in VIVA Language Dynamic (VL_DYNAMIC). The macro is executed in a dynamic mode.

TolPos: [0-100%]
Indicates the maximum positive tolerance accepted in the component measurement. The parameter is expressed as a percentage, with possible values included in the interval 0-100.

TolNeg: [0-100%]
Indicates the maximum negative tolerance accepted in the component measurement. The parameter is expressed as a percentage, with possible values included in the interval: 0-100.

InPositive: [0-N]
Indicates the channel connected to the positive input terminal of the component under measurement, where positive is the terminal of the **non-inverting** input of the component connected to the generator which stimulates the component by injecting current or by applying voltage. The parameter is expressed as a whole number, with possible values included in the interval: 0-N. If "InPositive" is =0, The macro is not executed. The OP_AMP_FV macro checks that the voltage value present on the terminal identified with parameter "InPositive" is equal to the voltage level measured on the terminal identified with parameter "OutPin".

InNegative: [0-N]
Indicates the channel connected to the negative input terminal of the component under measurement, where negative is the terminal of the **inverting** input of the component connected to the generator which stimulates the component by injecting current or by applying voltage. The parameter is expressed as a whole number, with possible values included in the interval: 0-N. If "InNegative" is =0, the macro is not executed. To set the operating mode as voltage follower, the execution of macro OP_AMP_FV will provoke a short-circuit between the terminals identified with parameters "InNegative" and "OutPin".

GndPin: [0-N]
Indicates the channel connected to the UUT ground terminal (GND) which contains the component to be measured. The parameter is expressed as a whole number, with possible values included in the interval: 0-N. If "GndPin" is =0, the macro is not executed.

OutPin: [0-N]
Indicates the channel connected to the output terminal of the component to be measured. The parameter is expressed as a whole number, with possible values included in the interval 0-N. If "OutPin" is =0, the macro is not executed.

Optional parameters

Value: [-100 -100 Volt]
Indicates the voltage value expected on the output terminal, connected to the channel indicated with parameter "OutPin.

TestResult: [Test Result|Force Pass|Force Fail|Force Skip]
Defines the kind of result obtained when executing the macro.
*For further details on this parameter, see **TestResult** in chapter 2.1 "Parameters with common meaning to several system macros.*

MeasureType: [Normal|Average|RecOnError|Maximum|Minimum|Peak ToPeak]
Defines the kind of elaborations made by the macro on executed measurements.
*For further details on this parameter, see **MeasureType** in chapter 2.1 "Parameters with common meaning to several system macros".*

Recycle: [0-1.000.000]
Indicates how many times measurement is executed.
*For further details on this parameter, see **Recycle** in chapter 2.1 "Parameters with common meaning to several system macros*

Frequency: [0-100.000 Hz]
Indicates the frequency of the generators connected to the two input terminals of the component indicated with parameters "InPositive" and "InNegative".

InCurrent: [0-0,5 A]
Indicates the value of the current injected to the input pin of the component under measurement, identified by parameter "InPositive". It is expressed in A, with possible values included in the interval: 0-0,5.

InVolt: [0-+10 V]
Indicates the peak to peak voltage value of the sinusoidal signal applied to the input pin of the component under measurement, identified by parameter "InPositive". The parameter is expressed in V, with possible values included in the interval: -10-+10.

OffsetV: [-10-10 V]
Indicates the average voltage value around which vary the two signals applied on the input terminals.

Quality: [0-100%]
Indicates the measurement quality average.
*For further details on this parameter, see **Quality** in chapter 2.1 "Parameters with common meaning to several system macros".*

SettlingWave: [0-100]
This parameter allows to change the delay time before acquiring the sample measurements. It is expressed as a whole number with possible values included in the interval:0-100. The number of waveforms output before measurement, corresponds to the value indicated by parameter "SettlingWave" divided by ten. (e.g. if "settlingWave" is="83", 8 waveforms are output before executing measurement). Usually, after stimulating the component to be measured, a delay time is required before beginning measurements, to exit the temporary regimes due to the existence of parasite capacities and inductances both in the module containing the measurement instruments and in the UUT. If we increase the value of parameter "SettlingWave" the delay time increases and the accuracy of measurement is improved. Of course, the time needed to execute measurements increases as well.

View [0|1|2]
Defines the kind of scale represented by the chart displayed in the page "Oscilloscope", selectable in the Debug Environment. The possible values for this parameter are:

- ***0*** *The scale represented on the x-axis of the chart displayed is Time and the y-axis is the value of signal measured on the output terminal identified with "OutPin".*
- ***1*** *The scale represented on the x-axis of the chart displayed is time and the y-axis is the value of the signal measured on the input terminal identified with parameter ""InPositive".*
- ***2*** *The scale represented on the x-axis of the chart displayed is time and the y-axis is the value of the signal measured on the input terminal identified with parameter ""InNegative".*

2.29 OP_AMP_GAIN

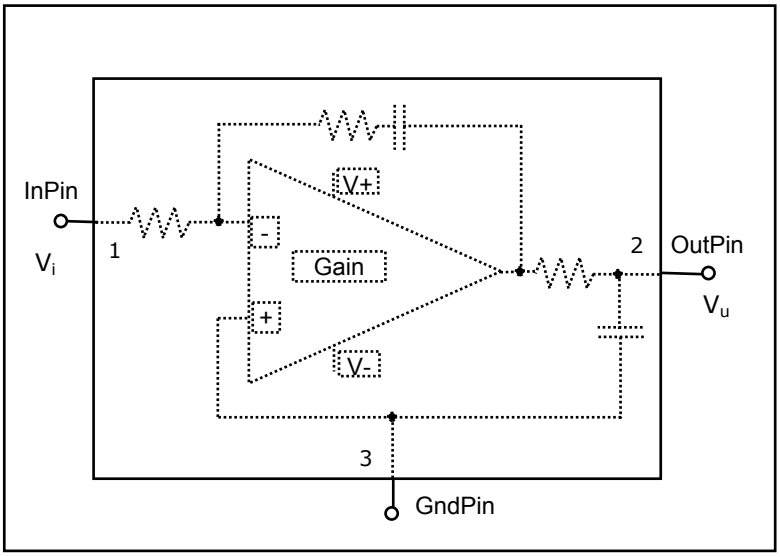

The OP_AMP_GAIN macro is used to check the operational amplifier kind components (OpAmp) present on the UUT. The operational amplifier is a high gain DC-coupled differential amplifier. The operational amplifier can be used in different operating modes: non-inverting amplifier, inverting amplifier, differential amplifier, voltage follower or buffer, comparator, oscillator, active filter, etc. .
With the VIVA SW, three system macros are available to check the main operating modes of an operational amplifier:

- Comparator (COMPARATOR)
- Amplifier (OP_AMP_VF)
- Voltage follower (OP_AMP_GAIN)

For other application modes related to the use of an operational amplifier, the user will have to develop the specific macro to check the specific modality of use of the operational amplifier.
When creating the program, the "OpAmp" function, available with VIVA SW, schedules the execution of these three macros to check the components associated to the function "OpAmp". The developer shall, soon after creating the program, chose the macro which corresponds to the circuitry configuration of the amplifier on the UUT disabling the execution of the other two.

The OP_AMP_GAIN macro is used to check the functionality of an operational amplifier used in the voltage amplifier mode. This operating mode allows to output a signal whose width is prorated to the width of the input signal. The OP_AMP_GAIN macro checks that the width of output signal is equal to the width of signal applied in input multiplied by the value indicated with parameter "Gain". Hence, the OP_AMP_GAIN is a macro which checks the operation of an electric tripole with an input pin, an output pin and a reference pin. Into the tripole there can be a single operational amplifier or a more complex set of components: the macro checks that the width of the two signal present on the input and on the output pin are linked by the proportionality coefficient indicated with parameter "Gain".

The OP_AMP_GAIN macro is a component of the "OpAmp" function and is executed , as an alternative to the other macros that make up the function "OpAmp", for the components which schedule the use of the function "OpAmp" for their check.

To execute the OP_AMP_GAIN macro, the component must be powered, hence the execution of the macro must be preceded by section "POWERON" to turn on the power supplies supplying voltages[15]: V+ and V-.

To execute the checks, the main parameters are related to the functionality of the component to be checked and to the internal points of the system (channels) where are connected the pins of the component to be tested. The optional parameters are related to the modes by which the macro executes measurements.

[15] On components data sheet, the two voltages V+ and V- are sometimes indicated as Vcc and Vdd or Vee and Vss.

Here below, a synthetic description of the macro parameters, considering the main parameters first and then the optional parameters.

OP_AMP_GAIN **(Name, ClusterName, ModuleType, TolPos, TolNeg, InPin, GndPin, OutPin, Value, Gain, TestResult, MeasureType, Recycle, Frequency, InCurrent, InVolt, OffsetV, Quality, SettlingWave, View)**

Main Parameters

Name:
Indicates the name of the component to be tested. The component name is the first element of the couple which identifies the node present on the UUT: <ComponentName-PinNumber>. If the component is associated to a complex device, the parameter "Name" has value: "ComponentName#*i*", where *i* identifies the part "SUBi" of the complex device.

ClusterName: [String]
Indicates the name of the cluster used to encode the macro. In the VL environment the word cluster indicates the code included between the instructions START "ClusterName" " Cluster Parameters….; and ENDTEST;. For OP_AMP_VF macro, the default value of this parameter is: "opagain", which identifies the part of code developed in VL to check the optoisolator components.

ModuleType: [NONE|VL|VBS|VL_DYNAMIC]
Identifies the kind of macro in use, i.e. the language used to develop the macro. The possible values are:

NONE	The macro in use is written in VIVA Native Language.
VL	The macro in use is written in VIVA Language (VL). The macro is executed in a static mode. This is the default value for "OP_AMP_GAIN" macro.
VBS	The macro in use is written in Visual Basic Script. (VBS).
VL_DYNAMIC	The macro in use is written in VIVA Language Dynamic (VL_DYNAMIC). The macro is executed in the dynamic mode.

TolPos: [0-100%]
Indicates the maximum positive tolerance accepted in the component measurement. The parameter is expressed as a percentage, with possible values included in the interval 0-100.

TolNeg: [0-100%]
Indicates the maximum negative tolerance accepted in the component measurement. The parameter is expressed as a percentage, with possible values included in the interval 0-100.
.

InPin: [0-N]
Indicates the channel connected to the input terminal of the component under measurement, where positive is the input terminal of the tripole containing a circuitry which allows to obtain $V_u:=V_i*Gain$. The parameter is expressed as a whole number, with possible values included in the interval 0-N. If "InPositive" is= 0, the macro is not executed.

GndPin: [0-N]
Indicates the channel connected to the UUT ground terminal (GND) which contains the component to be measured. The parameter is expressed as a whole number, with possible values included in the interval 0-N. If "GndPin" is=0, the macro is not executed.

OutPin: [0-N]
Indicates the channel connected to the output terminal of the component under measurement. The parameter is expressed as a whole number, with possible values included in the interval: 0-N. If "OutPin" is= 0, the macro is not executed. The OP_AMP_GAIN macro will check that the width of the signal present on the terminal identified with parameter "OutPin" is equal to the width of the signal present on the terminal identified with parameter "InPin" multiplied by the value indicated with parameter "Gain".

Optional parameters

Value: [-100 -100 Volt]
Indicates the voltage value expected on the output terminal, connected to the channel indicated with parameter "OutPin.

Gain: [1-10.000]
Indicates the operational amplifier gain.

TestResult: [Test Result|Force Pass|Force Fail|Force Skip]
Defines the kind of results obtained when executing the macro
For further details on this parameter, see ***TestResult*** *in chapter 2.1 "Parameters with common meaning to several system macros.*

MeasureType: [Normal|Average|RecOnError|Maximum|Minimum|Peak ToPeak]
Defines the kind of elaborations made by the macro on executed measurements.
For further details on this parameter, see ***MeasureType*** *in chapter 2.1 "Parameters with common meaning to several system macros".*

Recycle: [0-1.000.000]
Indicates how many times measurement is executed.
For further details on this parameter, see ***Recycle*** *in chapter 2.1 "Parameters with common meaning to several system macros*

Frequency: [0-100.000 Hz]
Indicates the frequency of generators connected to the two input terminals of the component indicated with parameters "InPositive" and "InNegative".

InCurrent: [0-0,5 A]
Indicates the value of the current injected to the input pin of the component under measurement, identified with parameter "InPositive". It is expressed in A, with possible values included in the interval: 0-0,5.

InVolt: [0-+10 V]
Indicates the peak to peak voltage value of the sinusoidal signal applied to the input pin of the component under measurement, identified with parameter "InPositive". It is expressed in V, with possible values included in the interval: -10-+10.

OffsetV: [-10-10 V]
Indicates the average voltage value around which varies the signal applied on the input terminal.

Quality: [0-100%]
Indicates the measurement quality average.
For further details on this parameter, see ***Quality*** *in chapter 2.1 "Parameters with common meaning to several system macros".*

SettlingWave: [0-100]
This parameter allows to modify the delay time before acquiring the sample measurements. It is expressed as a whole number, with possible values included in the interval: 0-100. The number of waveform output before measurement corresponds to the value indicated by "SettlingWave" divided by ten. (e.g. if "settlingWave" is = "83", eight waveforms are output before executing measurements). Usually, after stimulating the component, a delay time is required before beginning measurements, to exit the initial temporary regimes due to the existence of parasite capacities and inductances both in the module containing the measurement instruments and in the UUT. If we increase the value of parameter "SettlingWave", the delay time increases to and the accuracy of measurement is improved. Of course, the time needed to execute measurements increases as well.

View [0|1|2]

Defines the kind of scale represented by the chart displayed in the page "Oscilloscope", selectable in the Debug Environment. The possible values are:

- ***0*** *The scale represented on the x axis of the chart displayed is time and the y axis is the value of the signal measured on the output terminal identified with parameter "OutPin".*
- ***1*** *The scale represented on the x axis of the chart displayed is time and the y axis is the value of signal measured on the input terminal identified with parameter "InPin".*
- ***2*** *The scale represented on the x axis of the chart displayed is time and the y axis is the value of a scale to be defined, scheduled for future implementations.*

2.30 GATE

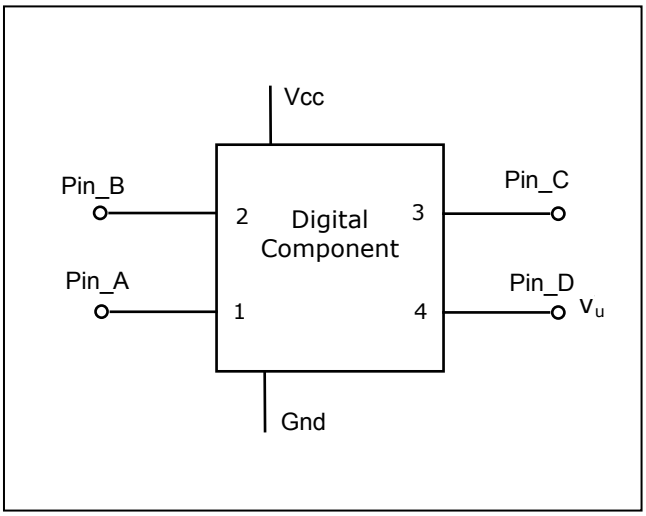

The GATE macro is used to check the digital components present on the UUT. A digital component is made up by two pins or more where it is possible to force or check the existence of a logic signal. Voltage analog levels (V_{OH}, V_{OL}, V_{IH}, V_{IL}) that discriminate the logic value of the signal, are specific for each component. The digital component pins can be either input or output pins, and a single pin can be in a moment an input pin and in another moment an output pin
The GATE macro, available with VIVA SW, allows to check a digital component made up by four pins.
So the GATE macro checks the operation of an electric quadripole with four pins for which configurations depend on the function present in the digital component. Into the quadripole there can be a single digital component or a more complex set of components: the macro checks that the configurations on every pin depend on the components of the quadripole.

To execute the GATE macro, the component must be powered, so the execution of the macro must be preceded by section "POWERON" to turn on the power supplies: Vcc

To execute the checks, the main parameters refer to the functionality of the component to be checked and to the internal points of the system (channels) where the pins of the component to be tested are connected. The optional parameters refer to the modes by which the macro executes measurements.

Here below, a synthetic description of the macro parameters is provided; you will find the main parameters first and then the optional parameters.

GATE **(Name, ClusterName, ModuleType, Function, Family, Vcc, Pin_A, Pin_B, Pin_C, Pin_D, PathPin_A, PathPin_B, PathPin_C, PathPin_D, Vi_H, Vi_L, Vo_H, Vo_L, TestResult, MeasureType, Recycle, Time, Current, Check_A, Check_B, Check_C, Check_D, AnalogView)**

Main parameters

Name:
Indicates the name of the component to be tested. The component name is the first element of the couple which identifies the node on the UUT: <ComponentName-PinNumber>. If the component is associated to a complex device, the parameter "Name" has the following value: "ComponentName#*i*", where *i* identifies the "SUBi" part of the complex device.

ClusterName: [String]
Indicates the name of the cluster used to encode the macro. In the VL environment the word cluster indicates the code included between the instructions: START "ClusterName" " Cluster Parametes….; and ENDTEST;. For the GATE macro, the default value of this parameter is: "Gate", which identifies the part of code developed in VL to check the optoisolator components.

ModuleType: [NONE|VL|VBS|VL_DYNAMIC]
The parameter identifies the kind of macro in use, i.e. the language used to develop the Macro. The possible values are:

NONE	The macro in use is written with VIVA Native Language.
VL	The macro in use is written in VIVA Language (VL). The macro is executed in a static mode. This is the default value for macro "GATE".
VBS	The macro in use is written in Visual Basic Script. (VBS).
VL_DYNAMIC	The macro in use is written in VIVA Language Dynamic (VL_DYNAMIC). The macro is executed in the dynamic mode.

Vcc: [0 -100 Volt]
The parameter indicates the voltage value "Vcc" to be used in order to power the component. If "Vcc" has value:–1, the default value for the parameter is "5".

Pin_A: [0-N]
Indicates the channel connected to pin #1 of the digital quadripole to be checked. If "Pin_A" is = 0, the pin is not checked.

Pin_B: [0-N]
Indicates the channel connected to pin #2 of the digital quadripole to be checked. If "Pin_B" is = 0, the pin is not checked.

Pin_C: [0-N]
Indicates the channel connected to pin #3 of the digital quadripole to be checked. If "Pin_C" is = 0, the pin is not checked.
Pin_D: [0-N]
Indicates the channel connected to pin #1 of the digital quadripole to be checked. If "Pin_D" is = 0, the pin is not checked.

Optional parameters

Function: [2NAND|2NOR|2AND|2OR|2XOR|3NAND|3NOR|3AND|3OR|3XOR|NOT| NE_BUF|E_BUF|NE_NBUF|EN_BUF|BUF243|BUF245]
Indicates the logical function contained into the quadripole to be checked. If parameters ""PathPin_A", "PathPin_B", "PathPin_C" and "PathPin_D" are not defined, the table of truth will be used to check the component, corresponding to the function defined with parameter "Function". A value different from "Default" allows to check the digital component using the table of truth corresponding to the function defined with the value of parameter "Function". The parameter can have one of the following values:

Default	*No prescribed logic function is used to check the component. The configurations defined with parameters: "PathPin_A", "PathPin_B" "PathPin_C" and "PathPin_D" are used instead.*
2NAND	*The component is checked using the truth table related to logic function NAND with 2 inputs.*
2NOR	*The component is checked using the truth table related to logic function NOR with 2 inputs.*
2OR	*The component is checked using the truth table related to logic function OR with 2 inputs.*
2XOR	*The component is checked using the truth table related to logic function XOR with 2 inputs.*
3NAND	*The component is checked using the truth table related to logic function NAND with 3 inputs.*
3NOR	*The component is checked using the truth table related to logic function NOR with 3 inputs.*
3OR	*The component is checked using the truth table related to logic function OR with 3 inputs.*
3XOR	*The component is checked using the truth table related to logic function XOR with 3 inputs.*
NOT	*The component is checked using the truth table related to logic function NOT with 1 input.*
NE_BUF	*The component is checked using the truth table related to a BUFFER, non inverting component, with enable pin at a low level.*

E_BUF *The component is checked using the truth table related to a BUFFER, non inverting component, with enable pin at a high level.*

NE_NBUF *The component is checked using the truth table related to a BUFFER inverting component, with enable pin at a low level.*

E_NBUF *The component is checked using the truth table related to a BUFFER inverting component, with enable pin at a high level.*

BUF243 *The component is checked using the truth table related to a buffer group component, bidirectional of the 243 kind.*

BUF245 *The component is checked using the truth table related to a buffer group component, bidirectional, of the 245 kind.*

Family: [Standard|L|S|H|LS|AS|ALS|F|C|HC|HCT|AHC|AHCT|FCT|AC|ACT|ACQ|ACTQ|ABT|GTL|GTLP|ALB|LV|LVC|LVCH|ALVC|LVT|ALVCR|ALVCH|LCX|VCX]

Indicates the belonging technological family of the digital component to be checked. The family identifies the electrical features (V_{OH}, V_{OL}, V_{IH}, V_{IL}) of its components. According to the kind of family, and to the voltage power value of the component, the macro GATE will determinte the proper electrical values, unless explicitly defined, when executing the scheduled checks. The possible values for parameter "Family" are:

Standard *The electrical features of the component are those of the family "Standard TTL"*

L *The electrical features of the component are those of the family: "Low Power TTL".*

S *The electrical features of the component are those of the family: "Schottky".*

H *The electrical features of the component are those of the family: "High Speed TTL".*

LS *The electrical features of the component are those of the family: "Low Power Schottky".*

AS *The electrical features of the component are those of the family: "Advanced Schottky"*

ALS *le caratteristiche elettriche del componente sono quelle della famiglia: "Advanced Low Power Schottky".*

F *The electrical features of the component are those of the family: "Fast TTL" (Fairchild).*

C *The electrical features of the component are those of the family: "CMOS (Vcc=3-5V)".*

HC *The electrical features of the component are those of the family: "High Speed CMOS (Vcc=2-6V)".*

HCT *The electrical features of the component are those of the family: "High Speed CMOS (Vcc=5V)".*

AHC *The electrical features of the component are those of the family: "Advanced High Speed CMOS (Vcc=2-6V)".*

AHCT *The electrical features of the component are those of the family: "Advanced High Speed CMOS (Vcc=5V)".*

FCT *The electrical features of the component are those of the family: "Fast CMOS Technology".*

AC *The electrical features of the component are those of the family: "Advanced CMOS (Vcc=3-5V)".*

ACT *The electrical features of the component are those of the family: "Advanced CMOS (Vcc=5V)".*

ACQ *The electrical features of the component are those of the family CMOS incorporated: "ACQ".*

ACTQ *The electrical features of the component are those of the family CMOS incorporated: "ACTQ".*

ABT *The electrical features of the component are those of the family: "Advanced BiCMOS Technology".*

GTL *The electrical features of the component are those of the family: "Gunning Transceiver Logic".*

GTLP *The electrical features of the component are those of the family "Gunning Transceiver Logic Plus".*

ALB *The electrical features of the component are those of the family: "Advanced LV BICMOS".*

LV *The electrical features of the component are those of the family: "Low Voltage HCMOS".*

LVC *The electrical features of the component are those of the family: "Low Voltage CMOS".*
LVCH *The electrical features of the component are those of the family: "High Speed Low Voltage CMOS".*
LVT *The electrical features of the component are those of the family: "Low Voltage BiCMOS Technology".*
ALVC *The electrical features of the component are those of the family: "Advanced Low Voltage CMOS".*
LVT *The electrical features of the component are those of the family: "Low Voltage BiCMOS".*
ALVCR *The electrical features of the component are those of the family: "Advanced Low Voltage CMOS".*
ALVCH *The electrical features of the component are those of the family: "Advanced Low Voltage CMOS", with bus hold ALVCH.*
LCX *The electrical features of the component are those of the family: "LCX" (Fairchild).*
VCX *The electrical features of the component are those of the family: "VCX" (Fairchild).*

PathPin_i: [String compound with characters: "0", "1", "L", "H" e "Z"]
This parameter, represented by a string, indicates a sequence of logic signals scheduled on the pin identified with parameter: Pin_i ("i" can have value: A ,B, C, or D) . Characters scheduled for the string are: "0", "1", "Z", "L" and "H" with the following meaning:

0 *indicates that on the pin is forced a logic value "0".*
1 *indicates that on the pin is forced a logic value "1".*
Z *indicates that the value forced on the pin is not a logic value, but the pin is forced to the value in tristate [16]. This means that on the pin will be forced a voltage level (V_{TH}) corresponding to the intermediate value between Vi_L and Vo_H. After this, a measurement is automatically executed to check that the forced level is present on the pin. The maximum value of the current injected is defined with the parameter "Current".*
L *indicates that the expected value on the pin is a logic value "0".*
H *indicates that the expected value on the pin is a logic value "1".*

If instead of the string, the parameter is set to value "–1" the sequence of signals on the pin, identified by "PathPin_i", is the one determined according to the value "Function". According to the characters that form the string, the pin is considered as an input pin, an output pin or a not connected pin. For instance:

01010011 *indicates an input pin; here will be forced in sequence the logic values: "01010011".*
LHLHLLHHZZ *indicates an output pin here are expected in sequence the logic values: "01010011"; after, the pin will be set to "tristate" status.*
01H10L11ZZ *indicates a pin considered as input pin for two periods, as output pin for the third period and, finally, as input pin for the fourth and fifth period; it is considered as an output pin for the sixth period, as input for seventh and eighth period; then it is set to the "tristate" status.*

Considering the last example we can see how a pin can be either input, output or disconnected in different moments. If, instead of the string the parameter is set to "–1" the sequence of signals on the pin identified by "PathPin_i".

PathPin_A: [String compound with characters: "0", "1","L", and "H"]
This parameter, represented by a string, indicates a sequence of logic signals scheduled on the pin identified by parameter "Pin_A The meaning of the parameter is the one indicated for parameter "PathPin_A"

PathPin_B: [String compound with characters: "0", "1","L", "H" and "Z"]
This parameter, represented by a string, indicates a sequence of logic signals scheduled on the pin identified by parameter "Pin_B". The meaning of the parameter is the one indicated for parameter "PathPin_i"

[16] It is possible to force a pin to the tristate value only if the pin is identified by parameters "Pin_B" and "Pin_D".

PathPin_C: ***[String compound with characters: "0", "1","L", and "H"]***
This parameter, represented by a string, indicates a sequence of logic signas scheduled on the pin identified by parameter "Pin_C". The meaning of the parameter is the one indicated for parameter "PathPin_i"

PathPin_D: ***[String compound with characters: "0", "1","L", "H" and "Z"]***
This parameter, represented by a string, indicates the sequence of logic signals scheduled on the pin identified by parameter "Pin_D". The meaning of the parameter is the one indicated for the parameter "PathPin_i"

Vi_H:[-12 -12 Volt]
Indicates the minimum value of the input voltage aknowledged as high logic value. If the value of the parameter is not set, the macro GATE determines it according to the belonging family of the component, defined by parameter "Family" and according to the power voltage, defined by parameter "Vcc" (Vi_H:=95% of Vcc).

Vi_L: [-12 -12 Volt]
Indicates the maximum value of the input voltage aknowledged as low logic value. If the value of the parameter is not set, the macro GATE determines it according to the belonging family of the component, defined by parameter "Family" and according to the voltage power, defined by parameter"Vcc". (Vi_H:=4% of Vcc).

Vo_H: ***[-12 -12 Volt]***
Indicates the minimum value of the output voltage with high logic value. If the value of the parameter is not set, the macro GATE determines it according to the belonging family of the component, defined by parameter "Family" and according to the power voltage, defined by parameter "Vcc" (Vo_H:=40% of Vcc).

Vo_L: ***[-12 -12 Volt]***
Indicates the maximum value of the output voltage with low logic value. If the value of the parameter is not defined, the macro GATE determines it according the belonging family of the component defined by parameter "Family" and according to the power voltage, defined by parameter "Vcc" (Vo_L:=16% of Vcc).

TestResult: ***[Test Result|Force Pass|Force Fail|Force Skip]***
Defines the kind of result obtained when executing the macro.
For further details on this parameter, see ***TestResult*** *in chapter 2.1 "Parameters with common meaning to several system macros.*

MeasureType: ***[Normal|Average|RecOnError|Maximum|Minimum|Peak ToPeak]***
Defines the kind of elaborations made by the macro on executed measurements.
For further details on this parameter, see ***MeasureType*** *in chapeter 2.1 "Parameters with common meaning to several system macros".*

Recycle: ***[0-1.000.000]***
Indicates how many times measurement is executed.
For further details on this parameter, see ***Recycle*** *in chapter 2.1 "Parameters with common meaning to several system macros*

Time: ***[0-1 sec]***
Indicates measurement time. The possible values are included in the interval: 0-1 and it is expressed in seconds. If "Time" is=0, the measurement time is not defined at the macro level but at a lower level. ("Drivers" and "DSP environment" for internal instruments management). See Fig. 1-1.

Current: ***[0-0,1 A]***
Indicates the maximum value of the current injected on the component pin when the tristate value is forced.

Check_A: ***[String compound with characters: "0" and "1"]***
The parameter, represented by a string as long as the string used for "PathPin_A", represents a mask to decide which digits have to be checked in the sequence of signals related to the pin identified by "Pin_A. The character "1" means that the matching digit ***must*** *be checked, while the character "0"means that the matching digit* ***must not*** *be checked. If the parameter is set to "-1" all the digits of the signal have to be checked: the operation is the same as when the parameter is made up by a series of "1".*

Check_B: ***[String compound with characters: "0" and "1"]***
The parameter, represented by a string as long as the string used for "PathPin_B", represents a mask to decide which digits have to be checked in the sequence of signals related to the pin identified by "Pin_B. The character "1" means that the matching digit ***must*** *be checked, while the character "0"means that the matching digit* ***must not*** *be checked. If the parameter is set to "-1" all the digits of the signal have to be checked: the operation is the same as when the parameter is made up by a series of "1".*

Check_C: ***[String compound with characters: "0" and "1"]***
The parameter, represented by a string as long as the string used for "PathPin_C", represents a mask to decide which digits have to be checked in the sequence of signals related to the pin identified by "Pin_C. The character "1" means that the matching digit ***must*** *be checked, while the character "0"means that the matching digit* ***must not*** *be checked. If the parameter is set to "-1" all the digits of the signal have to be checked: the operation is the same as when the parameter is made up by a series of "1".*
Check_D: ***[String compound with characters: "0" and "1"]***
The parameter, represented by a string as long as the string used for "PathPin_D", represents a mask to decide which digits have to be checked in the sequence of signals related to the pin identified by "Pin_D. The character "1" means that the matching digit ***must*** *be checked, while the character "0"means that the matching digit* ***must not*** *be checked. If the parameter is set to "-1" all the digits of the signal have to be checked: the operation is the same as when the parameter is made up by a series of "1".*

AnalogView ***[1|2|3|4]***
Indicates the pin for which is displayed the value of the executed measurement on the digital-analog indicator displayed in the page "Program", when executing the macro.

The charts here below refer the voltage levels related to a digital circuit of TTL Standard family, to sample the voltage levels in input, output and to stress the relation between these levels and the power voltage of the digital circuit.

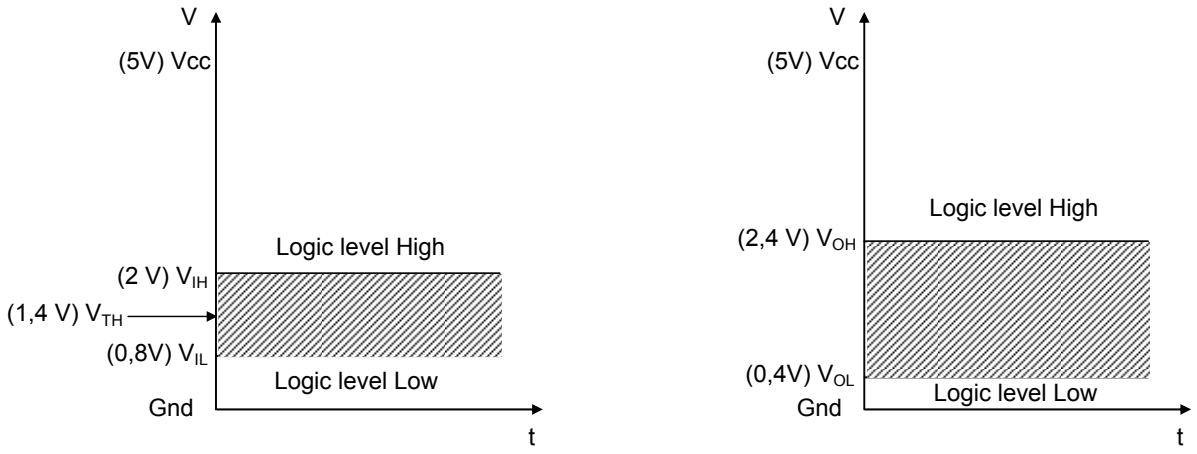

Fig. 2-10 –TTL standard family: Voltage levels

2.31 DIGPIN

The DIGPIN macro is used to check the behavior of the polygonal (NET) associated to a signal and connected to one or more nodes of the UUT. The signal may be connected both to analog/digital components and passive components.
This macro allows to cheek:

- The current needed to bring the logic signal from high level (HI) to low level (LO) and vice versa.
- The existence of a high impedance signal.
- The existence of a pulse signal (clock) .
- The logic status with regard to a sample board signals.
- The voltage detected with reference to the one detected on a sample board.

The check is made by powering up the board and, through a single channel which identifies a NET, check its electrical features disregarding the kind of components connected to the NET. This test is repeated on all board nets except power on and GND.

Fig. 2-11 shows the electrical connection, set with DIGPIN macro instructions to perform the tests on UUT signals. The figure shows a single polygonal which represents the test on a single signal.

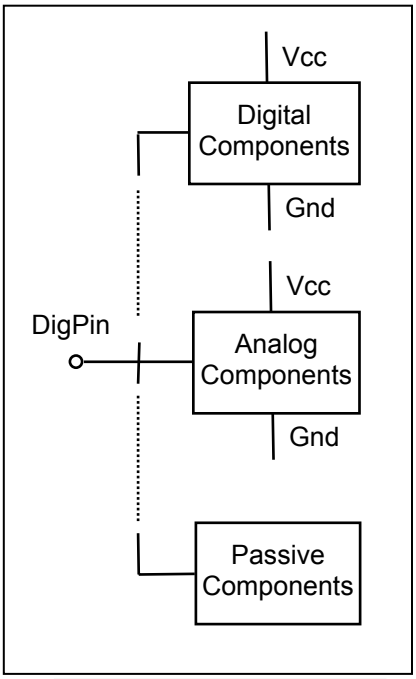

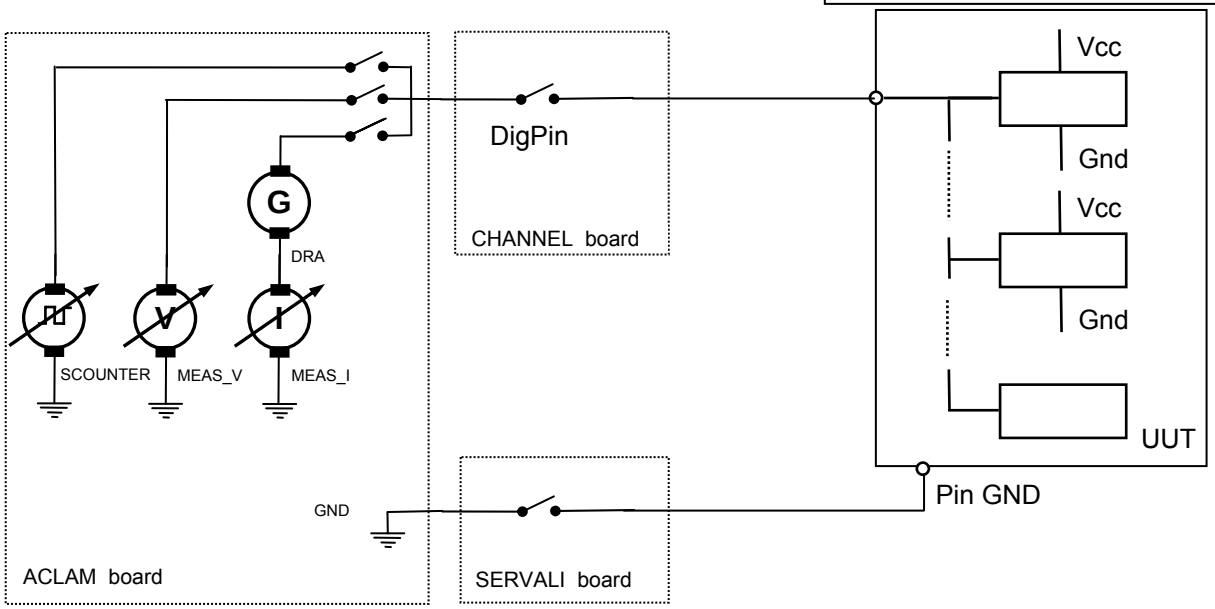

Fig. 2-11 - VIVA: Electrical connection between the test system and the UUT

The function "DGT_PRG", provided with the VIVA SW, and available in "Function & Macro data base" (Fig. 3-1), uses the DIGPIN macro to check the electrical features of the signals existing on a powered up UUT. As explained in chapter 3.2 (Functions in Programming Environment), the section "Patterns" for the "DGT_PRG" function is empty, to indicate that this function is not associated neither to devices nor components listed in the "Board CAD data base" (Fig. 3-1).

The choice to execute the "DGT_PRG" function on UUT signals is made in the "Create Program", phase by selecting the flags: "Power" and "PwMon", in the "Advanced Create Program Settings". Fig. 2-2)

The DIGPIN macro includes in the list of parameters the current, voltage and frequency values to be checked, giving also the accepted tolerance for the expected values. To define the expected values, execute the program on sample boards in the autolearn mode or "Autolearn Autodebug" modes. The values acquired are stored in the program database and used when the program is executed in "Normal Test" mode.

To execute the DIGPIN macro, the component must be powered. Hence, activate the section "POWERON" to power on the power supplies: Vcc before executing the DIGPIN macro

To define a test strategy and view the obtained results, it is possible to use the macro parameters and the "MEMO Parameters". To view the "Memo Parameters", enter Debug Environment, select page "macro view" and then button "View Memo Parameters"

Below, a synthetic description of the macro parameters, considering the main parameters first and then the optional parameters.

DIGPIN **(Name, ClusterName, ModuleType, PinDig, ValueH, TolH, ValueL, TolL, ValueZ, TolZ, ValueAnalog, TolAnalog, ValueFreq, TolFreq, TestResult, MeasureType, Recycle, StrobeTime)**

Name:
This parameter is not relevant for DIGPIN macro, since the macro is executed on all the UUT signals and not on specific components. The parameter is present only to make the macro structure similar to the other macros written in VL; it is initialized to value "DigPin" and it is not managed by DIGPIN macro code.

ClusterName: [String]
Indicates the name of the cluster used to encode the macro. In VL environment, the word cluster indicates the code encluded between the two instructions START "ClusterName" " Cluster Parameters….; and ENDTEST;. For DIGPIN macro the default value is: "DigPin", to identify the part of code developed in VL to check the digital signals present on the UUT.

ModuleType: [NONE|VL|VBS|VL_DYNAMIC]
Identifies the kind of macro in use; i.e. the language used to develop the macro. The possible values for this parameter are:

NONE	The macro in use is written in VIVA native language.
VL	The macro in use is written in VIVA Language (VL). The macro is executed in the static mode. This is the default value for DIGPIN macro.
VBS	The macro in use is written in Vsual Basic Script. (VBS).
VL_DYNAMIC	The macro in use is written in VIVA Language Dynamic (VL_DYNAMIC). The macro is executed in the dynamic mode.

PinDig: [0-N]
Indicates the number of channel connected to the polygonal (NET) where there's the signal to be checked. It is expressed as a whole number; possible value range: 0-N. If "SignalPin" is=0, the macro is not executed.

ValueH: [0-0,5 Ampere]
Indicates the value of current needed so that the signal logic value switches from a Low to a High value. It is expressed in A, value range 0-0,5. This value is acquired by the system in the autolearn mode and is used in the test mode only if it exceeds the value indicated in "Memo Parameter": CURRENT_DRIVE_H".

TolH: [0-100%]
Indicates the highest tolerance accepted when measuring the current value indicated with "ValueH". It is expressed in %; value range 0-100.

ValueL [0-0,5 Ampere]
Indicates the value of current needed to bring the signal logic level from high level to low level. It is expressed in A, with possible values included in the interval 0-0,5. This value is acquired by the system in the autolearn mode and is used in the test mode only if its value exceeds the one indicated in "Memo Parameter": CURRENT_DRIVE_L".

TolL: [0-100%]
Indicates the highest tolerance accepted when measuring the current value indicated with "ValueL". It is expressed in %; value range: 0-100.

ValueZ [0-0,5 Ampere]
Indicates the value of current needed to bring the signal from an intermediate level (1/2 VCC) to a slightly higher value (3/2 VCC). The parameter is expressed in A, with value range 0-0,5. This value is acquired in the autolearned mode and it's used in the test mode only if it exceeds the value indicated in "Memo Parameter": CURRENT_HIMP".

TolZ: [0-100%]
Indicates the highest tolerance accepted when measuring the current value indicated with "ValueZ". It is expressed in %, with possible values included between 0 and 100.

ValueAnalog [0-10 Volt]
Indicates the voltage value of the signal, detected on a sample UUT when program is executed in the autolearn mode. It is expressed in V, with possible values included between 0 and 10.

TolAnalog: [0-100%]
Indicates the highest tolerance accepted when measuring the voltage value indicated by parameter "ValueAnalog". It is expressed in % (value range 0-100).

ValueFreq [0-10000000 Hertz]
Indicates the frequency value of the signal detected on a sample UUT when the program is executed in the autolearn mode. It is expressed in Hz, (value range: 0-10000000).

TolFreq: [0-100%]
Indicates the highest tolerance accepted when measuring the frequency value indicated with parameter "ValueAnalog". It is expressed in %. Value range: 0-100.

TestResult: [Test Result|Force Pass|Force Fail|Force Skip]
Defines the kind of result obtained when executing the macro.
For further details on this parameter, see **TestResult** in chapter 2.1 "Parameters with common meaning to several system macros".

MeasureType: [Normal|Average|RecOnError|Maximum|Minimum|Peak ToPeak]
Defines the kind of elaborations made by the macro on the measurements executed.
For further details on this parameter, see **MeasureType** in chapter 2.1 "Parameters with common meaning to several system macros".

Recycle: [0-1.000.000]
Indicate how many times measurement is executed.
For further details on this parameter, see **Recycle** in chapter 2.1 "Parameters with common meaning to several system macros".

StrobeTime: [0-10 Sec]
Indicates the lasting of the pulse applied on the polygonal.

2.31.1 “MEMO Parameters” for DIGPIN macro

The data available in dialog “View MEMO Parameters” (page “Macro View” in the Debug Environment allow to define the test strategy and show the data related to the last execution of the DIGPIN macro on the specific signal.

The data are divided in three categories named as:

DIGPIN	groups the data which define the test strategy on the specific signal.
ReportData	groups the data which refer the values measured with the last test executon in “Normal Test” mode.
ReportDataAutolearn	groups the data which refer information related top the last test execution in “Autolearn Test” or “Autodebug and Autolearn Test” mode

2.31.1.1 MEMO Parameters - DIGPIN

I “MEMO Parameters” presenti nella categoria “*DIGPIN*” sono i parametri che permettono la definizione della strategia di test sullo specifico segnale. Ciascun parametro è identificato con un nome:

EN_FORCE_TEST: [0|1]
Il parametro indica se deve essere eseguita, o non deve essere eseguita, la verifica del forzaggio sullo stato logico del segnale presente sulla poligonale. (0= Non Abilitato , 1 = Abilitato).

EN_CURRENT_HIG_TEST: [0|1]* (Default value 0)***
The parameter indicates if the test in the autolearn stage has acquired a current value which is higher than the set limit with “*CURRENT_DRIVE*”. If the value is equal to 1 the test is considered good when the current exceeds the mentioned threshold in the Unit Under Test.

EN_CURRENT_LOW_TEST: [0|1]* (Default value 0)***
The parameter indicates if the test in the autolearn stage has acquired a current value which is lower than the set limit “*CURRENT_DRIVE_MIN*”. If the value is equal to 1 the test is considered good when the current is lower than the mentioned threshold on the Unit Under Test.

HIMP_NET_GB: [0|1]* (Default 0)***
The parameter indicates if the test in the autolearn stage has detected a node at high impedance.If the value is equal to 1, this net will not be considered in error, if the same condition occurs in the board under test.
EN_READ_TEST: [0|1]
Indicates whether the voltage value check must be executed or not, using as expected value the one indicated in **ValueAnalog**, autolearned on a sample UUT, with its tolerance. (0= Not enabled, 1 = Enabled).

EN_STATUS_TEST: [0|1]
Indicates whether the status of the signal present on the polygonal must be checked or not, using as expected value the one autolearned on a sample UUT. (0= Not enabled, 1 = Enabled).

CURRENT_DRIVE_H: [0-0,5 Ampere]
Indicates the highest current value needed to switch the signal from a low to a high level. When the test is executed in “Normal” mode, if the measured current exceeds the value of this parameter, the test result is “FAIL”. If the test is executed in the “Autolearn mode” the value of current measured is associated to parameter **ValueH**, and the test result is “PASS”.

CURRENT_DRIVE_L: [0-0,5 Ampere]
Indicates the highest current value needed to switch the signal logical level from high to low logic status. If the test is executed in normal mode and the measured current exceeds the value of this parameter the test result is “FAIL”. If the test is executed in the autolearn mode, the value of current measured is associated to parameter **ValueL**, and the test result is “PASS”.

CURRENT_DRIVE_MIN_L: [0-0,5 Ampere] (Default 1 [mA])
The parameter indicates the minimum current value featuring the low logic level. Below this value, the test is considered in error **.

CURRENT_DRIVE_MIN_H: [0-0,5 Ampere] (Default 1 [mA])
The parameter indicates the minimum current value featuring the high logic level. Below this value, the test is considered in error **.

CURRENT_DRIVE_Z: [0-0,5 Ampere] (Default 0.2 [mA])
The parameter indicates the maximum current value featuring the high impedance. Over this value, the test is considered in error *.

CURRENT_DRIVE_HIMP: [0-0,5 Ampere]
Indicates the highest current value needed to maintain the signal logic level in a high impedance condition. (value included between 1/2 VCC and 3/2 VCC). When the test is executed in the normal mode and the measured current exceeds the value of this parameter, the test result is "FAIL". When the test is executed in the autolearn mode the measured current value is associated to **ValueZ**, and the test result is "PASS".

IH [-10-+10 Volt]
Indicates the lowest voltage value, applied by the driver on the poyigonal (NET) to force the high logic level. The parameter is expressed in V (value range: -10-+10).

IL [-10-+10 Volt]
Indicates the lowest voltage value, applied by the driver on the poligonal (NET) to force the low logic level. The parameter is expressed in V (value range: -10-+10).

OFFSET [-10-+10 Volt]
Indicates the reference voltage value for the components connected to the specific poligonal (NET). The parameter is expressed in V (value range: -10- +10).

OH [-10-+10 Volt]
Indicates the minimum voltage level, detected as high logic level and measured on the specific signal present on the poligonal (NET). The parameter is expressed in V (value range: -10-+10).

OL [-10-+10 Volt]
Indicates the highest voltage value detected as low logic value, measured on the specific signal present on the poligonal (NET). The parameter is expressed in V, (value range: -10- +10).

MAX_AMPERE: [0-0,5 Ampere]
Indicates the highest current value emitted by the generator used for the test.

* *(0 = Not enabled , 1 = Enabled)*
** *(except the event of autolearning)*
*** *(The autolearning stage may enable this parameter)*

2.31.1.2 MEMO Parameters - ReportData

The "MEMO Parameters" included in the category "*ReportData*" allow to view the values measured with the last test execution (in "Normal" mode). Each parameter is identified by a name:

STATUS: [Z|L|H|T|AZ|AL|AH]
Represents the logic status of the analyzed signal. The possible values are:

Z The level of the analyzed signal is at a high impedance.
L The level of the analyzed signal is at a low logic level.
H The level of the analyzed signal is at a high logic level.
T The analyzed signal has had a change of state.
Z+ The analyzed signal is an analog signal with an intermediate voltage level.
L+ The analyzed signal is an analog signal with a voltage level set to "Low".
H+ The analyzed signal is an analog signal with a voltage level set to "High".
L- The analyzed signal has a current lower than the minimum defined to change the logic status from "Low" to "High".
H- The analyzed signal has a current lower than the minimum defined to change the logic status from "High" to "Low".
ZA The level of the analyzed signal is at high impedance on an analog node.
LA The level of the analyzed signal is at low logic level on an analog node.
HA The level of the analyzed signal is at high logic level on an analog node.
A Analog node (*1) .
HVL The analyzed signal has a voltage value lower (negative) than the minimum level, hence the digital forcing test is not executed (*1).
HVH The analyzed signal has a voltage value higher than the maximum level, hence the digital forcing test is not executed (*1).
HVLA The analyzed signal has a voltage level lower (negative) than the minimum level, and it is an analog value (*1).
HVHA The analyzed signal has a voltage level higher than the maximum level, and it is an analog value (*1).
NC NO CONTACT detected or Node at Highest Impedance.
NCA NO CONTACT detected or Analog Node at Highest Impedance

CurrL: [CURRENT_DRIVE_L 0-0,5 Ampere]
Represents the current value needed to bring a specific signal to a low logic level. The parameter is displayed with a string which shows the measured value, the expected value and the scale range value[17].

CurrH: [CURRENT_DRIVE_H-0,5 Ampere]
Represents the current value needed to bring a specific signal to a high logic level. The parameter is displayed with a string which shows the measured value, the expected value and the scale range value.

CurrZ: [CURRENT_HIMP-0,5 Ampere]
Represents the value of current needed to maintain to maintain the signal at 3/2 VCC logical level. The signal is considered as high impedance. (value included between 1/2 VCC and 3/2 VCC).

Freq: [0-10000 KHertz]
Represents the value of frequency measured for the specific signal present on the polygonal (NET).

Value: [0-100 Volt]
Represents the value of frequency measured for the specific signal present on the polygonal (NET).

[17] E.g.: CurrL 0.010000 (0.012000) [A]

2.31.1.3 MEMO Parameters - ReportDataAutolearn

The "MEMO Parameters" available in the category "*ReportDataAutolearn*" allow to view the values measured with the last test executon in the autolearn mode.
To execute in autolearn mode use sample UUTs. The values detected in the autolearn mode are used as expected values when the test is executed in the normal mode.

Each parameter is identified by a name:

AUTO_STATUS: [Z|L|H|T|AZ|AL|AH]
Represents the logic status of the analyzed signal executing the test in the autolearn mode. The value of this parameter is relevant if the value of parameter **EN_STATUS_TEST** of DIGPIN group in "MEMO Parameters" is= 1. The parameter can have one of the following values:

Z The level of the analyzed signal is at a high impedance.
L The level of the analyzed signal is at a low logic level.
H The level of the analyzed signal is at a high logic level.
T The analyzed signal has had a change of state.
Z+ The analyzed signal is an analog signal with an intermediate voltage level.
L+ The analyzed signal is an analog signal with a voltage level set to "Low".
H+ The analyzed signal is an analog signal with a voltage level set to "High".
L- The analyzed signal has a current lower than the minimum defined to change the logic status from "Low" to "High".
H- The analyzed signal has a current lower than the minimum defined to change the logic status from "High" to "Low".
ZA The level of the analyzed signal is at high impedance on an analog node.
LA The level of the analyzed signal is at low logic level on an analog node.
HA The level of the analyzed signal is at high logic level on an analog node.
A Analog node (*1) .
HVL The analyzed signal has a voltage value lower (negative) than the minimum level, hence the digital forcing test is not executed (*1).
HVH The analyzed signal has a voltage value higher than the maximum level, hence the digital forcing test is not executed (*1).
HVLA The analyzed signal has a voltage level lower (negative) than the minimum level, and it is an analog value (*1).
HVHA The analyzed signal has a voltage level higher than the maximum level, and it is an analog value (*1).
NC NO CONTACT detected or Node at Highest Impedance.
NCA NO CONTACT detected or Analog Node at Highest Impedance

AUTO_CurrL_A: [CURRENT_DRIVE_L-0,5 Ampere]
Represents the value of current needed to bring a specific signal to a low logic level, executing the test in the autolearn mode.

AUTO_CurrH_A: [CURRENT_DRIVE_H-0,5 Ampere]
Represents the value of current needed to bring a specific signal to a high logic level, executing the test in the autolearn mode.

AUTO_CurrZ_A: [CURRENT_HIMP-0,5 Ampere]
Represent the value of current needed to maintain the signal at a level of 3/2 VCC, executing the test in the autolearn mode. The signal is considered as high impedance. (value included between 1/2 VCC and 3/2 VCC).

Freq: [0-10000 KHertz]
Represents the frequency value measured for the specific signal present on the polygonal (NET) , executing the test in the autolearn mode.

Value: [0-100 Volt]
Represents the value of the frequency measured for the specific signal present on the polygonal (NET), executing the test in the autolearn mode.

2.31.1.4 Test strategies with DIGPIN macros

The following parameters allow to change the test strategy

- **EN_FORCE_TEST**
- **EN_CURRENT_HIG_TEST**
- **EN_CURRENT_LOW_TEST**
- **EN_READ_TEST**
- **EN_STATUS_TEST**

EN_FORCE_TEST

By default, **EN_FORCE_TEST** is normally enabled, this kind of test may be executed without performing any type of autolearn. Practically, the test is considered:

PASS in the following cases:

Z The level of the analyzed signal is at high impedance.
L The level of the analyzed signal is at low logic level.
H The level of the analyzed signal is at high logic level.
T The analyzed signal has had a change of state.
ZA The level of the analyzed signal is at high impedance on an analog node.
LA The level of the analyzed signal is at a low logic level on an analog node.
HA The level of the analyzed signal is at a high logic level on an analog node.
A Analog Node (*1) .
HVL The analyzed signal as a voltage value lower (negative) than the minimum level, hence the test of digital forcing is not executed (*1).
HVH The analyzed signal has a voltage value higher than the maximum level, hence the test of digital forcing is not executed (*1).
HVLA The analyzed signal has a voltage value lower (negative) than the minimum level, and it is an analog value (*1).
HVHA The analyzed signal has a voltage value higher than the maximum level, and it is an analog signal (*1).

FAIL in the following cases (*2):

Z+ The analyzed signal is an analog signal with an intermediate voltage level.
L+ The analyzed signal is an analog signal with a voltage level set to “Low”.
H+ The analyzed signal is an analog signal with a voltage level set to “High”.
L- The analyzed signal has a current lower than the minimum defined to change the logic status from “Low” to “High”.
H- The analyzed signal has a current lower than the minimum defined to change the logic status from “High” to “Low”.
NC NO CONTACT detected or Node at Highest Impedance.
NCA NO CONTACT detected or Analog Node at Highest Impedance
A **HVL, HVH, HVLA, HVHA, A** status, autolearned on the sample board, enables the test of the voltage value on the faulty board; if the same value is not detected on the latter, an error is reported (this procedure is used to guarantee a coverage also for analog signals).

EN_CURRENT_HIG_TEST

By default, the **EN_CURRENT_HIG_TEST** parameter is disabile. It is automatically enabled upon an execution in autolearn mode. It allows you to enable the current test, autolearned on the sample board, when the value exceeds **CURRENT_DRIVE_H** or **CURRENT_DRIVE_L.**

EN_CURRENT_LOW_TEST

By default, the parameter **EN_CURRENT_LOW_TEST** is disabile. It is automatically enabled upon an execution in the autolearn mode. It allows you to enable the current test, autolearned on the sample board, when the value is lower than **CURRENT_DRIVE_MIN.**

EN_FORCE_TEST

By default condition, only **EN_FORCE_TEST** parameter is enabled; this kind of test may be executed without performing the autolearn. The test result is "pass" in the following instances:

EN_CURRENT_ANA_TEST

The default condition of the parameter **EN_CURRENT_ANA_TEST** is "not enabled". It is automatically enabled after executing the test in autolearn mode. It allows to enable the current check, autolearned on the sample board, when the value of this parameter exceeds the value indicated in **CURRENT_DRIVE_H** or **CURRENT_DRIVE_L.**

EN_READ_TEST

The default condition of parameter **EN_READ_TEST** is "not enabled", it is not automatically enabled after autolearn mode executon but can be manually enabled. It allows to perform the voltage test autolearned on a sample board

EN_STATUS_TEST

The default condition of the parameter **EN_STATUS_TEST** is not enabled; it is not automatically enabled after an autolearn mode execution, but can be manually enabled. It allows to execute the logic status test autolearned on a sample board.

CONCLUSION

The parameter **EN_CURRENT_ANA_TEST** needs to be executed with a good board and grants a higher stability of the test.

The parameters **EN_READ_TEST** and **EN_STATUS_TEST** give a higher detail to the kind of test, but increase its instability, particularly on boards whose logic status is not sure and may change random during the test execution.

**1 If in the Autolearn Procedure the parameter EN_READ_TEST is enabled.*

**2 Unless these are conditions present on the GOOD board.*

2.32 CLUSTER

The macro CLUSTER is used to check the components on the UUT by executing the instructions contained in a cluster.
In the VIVA environment, the word "cluster" indicates the code included between the instructions START "ClusterName" " Cluster Parameters….; and ENDTEST;. The instructions are written in VIVA Language (VL) and are contained into a dile with ".pat". extension. For further details, refer to the information provided in [[4]] and to the on line documentation of the VIVA SW.

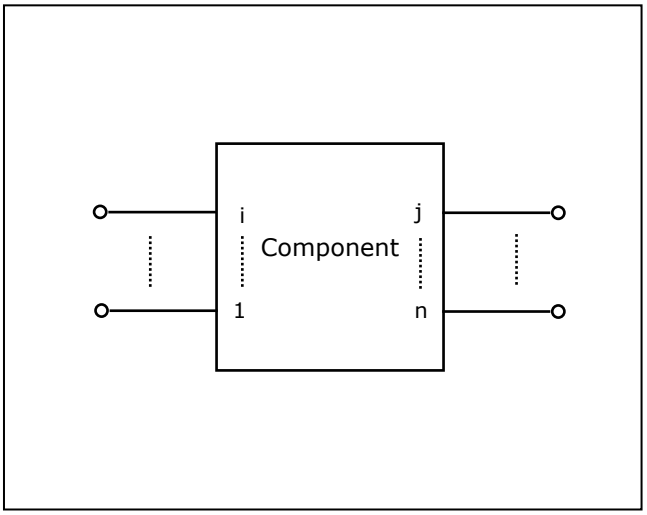

The file which contains the instructions used to check per the component must be stored in the testing program folder; it is possible to choose any name, but the extension must be ".pat".

The only instructions that will be executed through the CLUSTER macro, are those present in the cluster: if, for example, the instructions in the cluster schedule the component to be powered, it is necessary to include in the cluster the suitable instructions to power the power supplies or to execute section "POWERON" before executing the cluster.

To execute the checks, the main parameters are related to the functionality of the component to be checked and to the internal points of the system (channels) where the pins of component to be tested are connected. The optional parameters are related to the modes by which the macro executes measurements.

Here follows a synthetic description of the macro parameters, considering the main parameters first and then the optional parameters.

CLUSTER (Name, ModuleType, Value, PinList)

Main parameters

Name:
Indicates the name of the component to be tested. The component name is the first element of the couple which identifies the node on the UUT: <ComponentName-PinNumber>. If the component is associated to a complex device, the parameter "Name" appears as "ComponentName#*i*", where *i* identifies the part "SUBi" of the complex device. This parameter also identifies the cluster that will be executed. Its meaning is the same as parameter "ClusterName" in the system macros written in VL. I.e.: "The parameter indicates the name of the cluster used to encode the macro. In the VL environment, the word cluster indicates the code included between the instructions START "ClusterName" " Cluster Parameters….; and ENDTEST;.

Optional parameters

ModuleType: ***[NONE|VL|VBS|VL_DYNAMIC]***
Identifies the kind of macro in use, i.e. the language used to develop the Macro. The parameter can have one of the following values:

NONE	*The macro in use is written in VIVA native language.*
VL	*The macro in use is written in VIVA Language (VL). The macro is executed in the. static mode; this is the default value for macro "CLUSTER".*
VBS	*The macro in use is written in Visual Basic Script. (VBS).*
VL_DYNAMIC	*The macro in use is written in VIVA Language Dynamic (VL_DYNAMIC). The macro is executed in the dynamic mode.*

Value :[Number]
Indicates the value of the scale to be checked for the component. This value can be found in the CAD data and in the Board CAD data base. (Field "Value" in the file "name.par" in CAD data of Seica format).

PinList: [List of channels belonging to the interval: 0-N]
Indicates the list of channels that the macro will use to checkthe component.
The parameter can contain either one channel or a group of channels listed in sequence (each one separated from the other using character:"-".

2.33 CLUSTERDIAG

The CLUSTERDIAG macro is used to check the UUT components by executing the instructions contained in a cluster.
In the VIVA environment the word "cluster" indicates the code included between the instructions START "ClusterName" " Cluster Parameters….; and ENDTEST;. The instructions are written in VIVA Language (VL) and are contained in a file with extension ".pat". For further details, please refer to the information included in [[4]] and to the on line documentation of the VIVA SW.

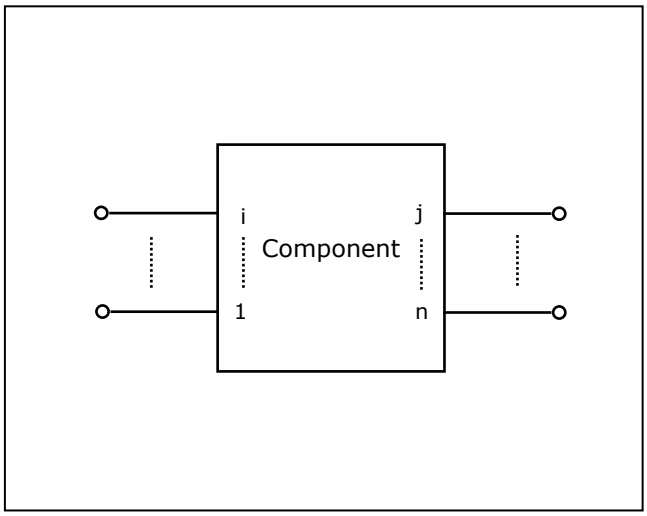

The file containing the instructions used to check the component can be stored into the testing program folder; you can choose any name, but the extension must be: ".pat".

The only instructions that will be executed through the CLUSTERDIAG macro, are those present in the cluster: if, for example, the instructions in the cluster schedule that the component must be powered, it is necessary to included in the cluster the suitable instructions to power the power supplies or to execute the section "POWERON" before the cluster.

The CLUSTERDIAG macro is the same as the CLUSTER macro, but there can be in the executed cluster instructions to manage the digital probe and the diagnostic dictionary.

To execute the checks, the main parameters are related to the functionality of the component to be checked and to the internal points of the system (channels) where the pins of the component to be tested are connected. The optional parameters are related to the mode by which the macro executes measurements.

Here follows a synthetic description of the macro parameters, describing the main parameters first and then the optional parameters.

CLUSTER (Name, ModuleType, Value, PinList, EnableProbe, EnableDictionary)

Main Parameters

Name:
Indicates the name of the component to be tested. The component name is the first element of the couple which identifies the node on the UUT: <ComponentName-PinNumber>. If the component is associated to a complex device the parameter "Name" appears as "ComponentName#*i*", where *i* identifies the part "SUBi" of the complex device. This parameter also identifies the cluster that will be executed. Its meaning is the same as the parameter "ClusterName" you find in the system macros written in VL. That is: "The parameter indicates the name of the cluster used to encode the macro. In the VL environment, the word "cluster" indicates the code included between the instructions START "ClusterName" " Cluster Parameters….; and ENDTEST;.

Optional parameters

ModuleType: ***[NONE|VL|VBS|VL_DYNAMIC]***
Identifies the kind of macro in use, i.e. the language used to develop the Macro. The parameter can have one of the following values:

NONE	*The macro in use is written in VIVA native language.*
VL	*The macro in use is written in VIVA Language (VL). The macro is executed in the static mode. This is the default value for macro "CLUSTERDIAG".*
VBS	*The macro in use is written in Visual Basic Script. (VBS).*
VL_DYNAMIC	*The macro in use is written in VIVA Language Dynamic (VL_DYNAMIC). The macro is executed in the dynamic mode.*

Value:[Number]
The parameter indicates the value of the scale to be checked for the component This value can be found in the CAD data and in the Board CAD data base. (Field "Value" in file "name.par" in the CAD data of Seica format).

PinList: [List of channels included in the interval: 0-N]
Indicates the list of channels used by the macro to check the component.
The parameter can contain either one channel or a group of channels listed in sequence each one separated by character "-".

EnableProbe: [No|YES]
The parameter is used to disable/enable the use of the digital probe. If the digital probe is not enabled, the instructions to manage the digital probe will not be executed.

EnableDictionary: [No|YES]
The parameter is used to disable/enable the use of the diagnostic dictionary. If the dictionary is not enabled, the instructions that manage the dictionary will not be executed.

2.34 ASKUSER

The system macro ASKUSER is an example of macro written in VBS language, whose execution is performed through the VBS tool included in the VIVA toolset.[18]

From the figure on the right we can deduct that to write in the areas "Info page" and "Report page" the two methods "WriteMessage" and "WriteReport" have been used. These are available with the VBS "S2KTest" object included in the VIVA Software.

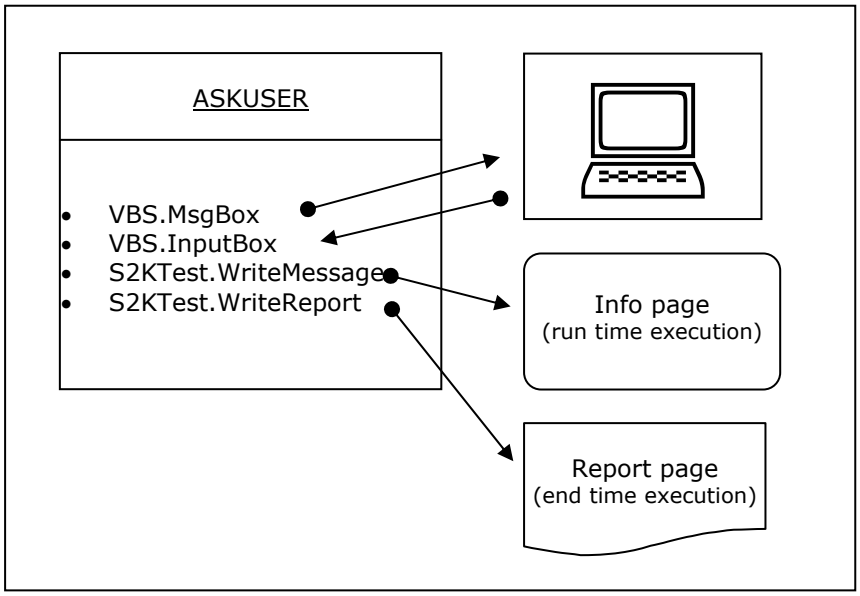

The execution of the ASKUSER macro schedules the following steps:

1. Ask the operator to input a numeric datum by executing the instruction VBS "InputBox", (it is possible to define the title of the dialog and the message contained in the body of the dialog window displayed.
2. Check that the input edited belongs to the scale range gap defined with two parameters of the macro ("LowestValue" and "HighestValue"). Until the edited datum is not correct, an error message appears: this message can be customized using a parameter of the macro ("ErrorMessage").
3. If asked (parameter "AskConfirm"), a confirm message is output (this too can be customized using a parameter of the macro ("ConfirmMessage").
4. If you answer "NO" to the confirm message, the macro execution is ended. If you answer "YES" to the confirm message, or if the confirm message was not scheduled, the macro execution continues.
5. If asked (parameter "ShowOnInfo"), a message is displayed in the page dedicated to runtime messages when the program is executed. This message can be customized using a parameter of the macro ("InfoMessage").
6. If asked (parameter "ShowOnReport"), a message is displayed in the page dedicated to report messages, displayed after program execution. It is possible to customize this message using a parameter of the macro ("ReportMessage").

To execute the checks, the main parameter are related to the functionality of the component to be checked and to the internal points of the system (channels) where are connected the pins of the component to be tested. The optional parameters are related to the modes by which the macro executed measurements.

Here follows a synthetic description of the macro parameters, without distinction between main and optional parameters. The user can personalize the definition of "optional parameter" in the Programming Environment.

ASKUSER **(ModuleType, Title, Prompt, DefaultValue, LowestValue, HighestValue, ErrorMessage, AskConfim, ConfirmMessage, ShowedIcon, ShowedButton, DefaultButton, ShowOnInfo, InfoMessage, ShowOnReport, ReportMessage)**

[18] The VIVA tools available are displayed in the Programming Environment, after selecting a macro, the page "Code" of the macro, button "Edit…" and button "New" to add a new code string in the instructions of the macro.

ModuleType: [NONE|VL|VBS|VL_DYNAMIC]
The parameter identifies the kind of macro in use, i.e. the language used to develop the Macro. The parameter can have one of the following values:

NONE	The macro in use is written in VIVA native language.
VL	The macro in use is written in VIVA Language (VL). The macro is executed in the static mode.
VBS	The macro in use is written in Visual Basic Script. (VBS). This is the default value for "ASKUSER" macro.
VL_DYNAMIC	The macro in use is written in VIVA Language Dynamic (VL_DYNAMIC). The macro is executed in the dynamic mode.

Title: [String]
Indicates the message that will be displayed in the title bar of the dialogs used to interact with the operator.

Prompt: [String]
Indicates the message that will be displayed into the dialog used to ask the input to the operator.

DefaultValue: [LowestValue ÷ HighestValue]
Indicates the default value suggested into the dialog used to ask the input to the operator.

LowestValue: [0 ÷ N]
Indicates the lowest value in the range of values accepted by the dialog used to ask the input to the operator.

HighestValue: [0 ÷ N]
Indicates the highest value in the range of values accepted by the dialog used to ask the input to the operator.

ErrorMessage: [String]
Indicates the message displayed if the input value is not included in the interval: [LowestValue-HighestValue], or if you select the button "Cancel" in the dialog used to ask the input to the operator.

AskConfirm: [NO|YES]
Indicates whether the output of a confirm message for the edited input is disabled or enabled.

ConfirmMessage: [String]
Indicated the message that will be displayed into the dialog used to ask the operator to confirm the value of the input edited.

ShowedIcon: [Critical|Question|Exclamation|Information]
Indicates the icon that will be displayed into the dialog used to confirm the input value edited. The meaning is that of the second group of values of the parameter "buttons" of "MsgBox" function in the VBS environment, i.e.:

Critical	(16)	Display Critical Message icon.
Question	(32)	Display Warning Query icon.
Exclamation	(48)	Display Warning Message icon.
Information	(64)	Display Information Message icon

It is important to consider that the ASKUSER macro updates the parameter "buttons" of "MsgBox" function in the VBS environment with the value obtained by summing the values of parameters "ShowedIcon", ShowedButton" and "DefaultButton".

ShowedButton: [OK|OKCancel|AbortRetryIgnore|YesNoCancel|YesNo|RetryCancel]
Indicates the number and the kind of buttons that will be displayed into the dialog used to ask the operator to confirm the edited input. The meaning is that of the first group of values of parameter "buttons" of "MsgBox" function in the VBS environment, i.e.:

OK	(0)	Display **OK** button only.	(Button1).
OKCancel	(1)	Display **OK** and **Cancel** buttons.	(Button1 and Button2)
AbortRetryIgnore	(2)	Display **Abort**, **Retry,** and **Ignore** buttons.	(Button1, Button2 and Button3)
YesNoCancel	(3)	Display **Yes**, **No,** and **Cancel** buttons.	(Button1, Button2 and Button3)
YesNo	(4)	Display **Yes** and **No** buttons.	(Button1 and Button2)
RetryCancel	(5)	Display **Retry** and **Cancel** buttons.	(Button1 and Button2)

It is important to consider that the ASKUSER macro updates the parameter "buttons" of "MsgBox" function in the VBS environment with the value obtained by summing the values of parameters "ShowedIcon", ShowedButton" and "DefaultButton".

DefaultButton: [Button1|Button2|Button3]
Indicates the return code output by the dialog used to ask the operator to confirm the input value edited, when instead of selecting a button, the key "Enter" is pressed on the keyboard. The meaning is that of the third group of value of parameter "buttons" of "MsgBox" function in the VBS environment, i.e.:

Button1	(0)	Return Code the same as **OK,** or **Abort,** or **Yes,** or **Retry** button Selected.
Button2	(256)	Return Code the same as **Cancel,** or **Retry,** or **No** button Selected.
Button3	(512)	Return Code the same as **Ignore,** or **Cancel** button Selected.

Of course, the value given to parameter "DefaultBotton" must be congruent with the value given to parameter "ShowedButton".
It is important to consider that the ASKUSER macro updates the parameter "buttons" of "MsgBox" function in the VBS environment with the value obtained by summing the values of parameters "ShowedIcon", ShowedButton" and "DefaultButton".

ShowOnInfo: [NO|YES]
Indicates whether the output of a message in the page "Info" (which shows the runtime information of the program) is disabled or enabled. The output message is defined by parameter "InfoMessage".

InfoMessage: [String]
Indicates the message that will be displayed in page "Info" of the program execution environment when parameter "ShowOnInfo" has value: "YES".

ShowOnReport: [NO|YES]
Indicates whether the output of a message in page "Report" (which refers information after program execution) is disabled or enabled. The output message is defined by parameter "ReportMessage".

ReportMessage: [String]
Indicates the message that will be displayed in the page "Report" of program execution environment when parameter "ShowOnReport" has value: "YES".

2.35 MESSAGE

The system macro MESSAGE is an example of macro written in VBS language, whose execution is performed through the VBS tool included in the VIVA toolkit.[19]

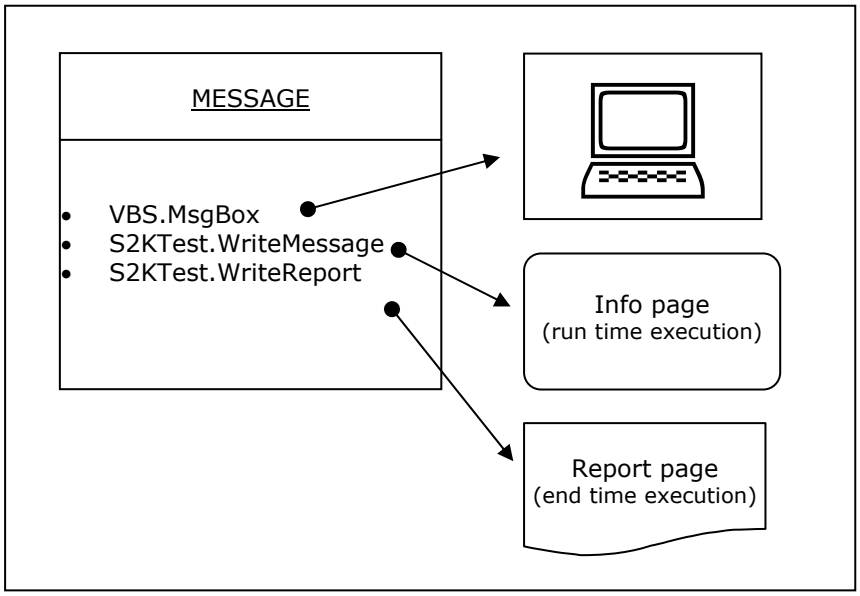

From the figure on the right we can deduct that to write the areas "Info page" and "Report page" the two methods "WriteMessage" and "WriteReport" have been used. These are available with the VBS "S2KTest" object included in the VIVA Software.

The execution of MESSAGE macro schedules the following steps:

1. If asked (parameter "ProgramPause"), the message defined by parameter "Message" is output with "MsgBox" function in VBS environment, which interrupts the program execution and waits an input from the operator to continue.
2. If asked (parameter "ShowOnInfo"), the message defined by parameter "Message" is output in the page dedicated to runtime messages during the program execution.
3. If asked (parameter "ShowOnReport"), the message defined with parameter "Message" is output in the page dedicated to report messages displayed at the end of program execution.

To execute the checks, the main parameters are related to the functionality of the component to be checked and to the internal points of the system (channels) where are connected the pins of the component to be checked. The optional parameters are related to the modes by which the macro executes the measurements.

Here follows a synthetic description of the macro parameters, without distinction between main and optional parameters. The user can customize the definition of "optional parameter" in the Programming Environment.

MESSAGE **(ModuleType, Message, ShowOnInfo, ShowOnReport, ProgramPause, Title, ShowedIcon, ShowedButton, DefaultButton)**

ModuleType: [NONE|VL|VBS|VL_DYNAMIC]
Identifies the kind of macro in use, i.e. the language used to develop the Macro. The parameter can have one of the following values:

NONE	The macro in use is written in VIVA native language.
VL	The macro in use is written in VIVA Language (VL). The macro is executed in the static mode.
VBS	The macro in use is written in Visual Basic Script. (VBS). This is the default value for "MESSAGE" macro.
VL_DYNAMIC	The macro in use is written in VIVA Language Dynamic (VL_DYNAMIC). The macro is executed in the dynamic mode.

ShowOnInfo: [NO|YES]
Indicates whether the output of the message defined by parameter "Message" in page "Info" (which refers program runtime information) is disabled or enabled.

[19] The VIVA tools available are those displayed in the "Programming Environment", after selecting a macro, the page "Code" of the macro, button "Edit…" and button "New" to add a new code string in the instructions of the macro.

ShowOnReport: [NO|YES]
Indicates whether the output of the message defined with parameter "Message" in page "Report" (which shows information at the end of program execution) is disabled or enabled.

ProgramPause: [NO|YES]
Indicates whether the output of message defined by parameter "Message" with "MsgBox" function in the VBS environment, (which interrupts the program execution and waits for an input from the operator to continue) is disabled or enabled.

Title: [String]
Indicates the message that will be displayed in the title bar of dialogs used to interact with the operator.

ShowedIcon: [Critical|Question|Exclamation|Information]
Indicates the icon thta will be displayed into the dialog used to confirm the edited input value. The meaning is that of the second group of values for parameter "buttons" of "MsgBox" function in the VBS environment, i.e.:

Critical	(16)	Display Critical Message icon.
Question	(32)	Display Warning Query icon.
Exclamation	(48)	Display Warning Message icon.
Information	(64)	Display Information Message icon

It is important to consider that the MESSAGE macro updates the parameter "buttons" of "MsgBox" function in VBS environment with the value obtained by summing the value of parameters "ShowedIcon", ShowedButton" and "DefaultButton".

ShowedButton: [OK|OKCancel|AbortRetryIgnore|YesNoCancel|YesNo|RetryCancel]
Indicates the number and the kind of buttons that will be displayed into the dialog used to ask the operator to confirm the edited input value. The meaning is that of the first group of values for parameter "buttons" of "MsgBox" function in the VBS environment, i.e.:

OK	(0)	Display **OK** button only.	(Button1).
OKCancel	(1)	Display **OK** and **Cancel** buttons.	(Button1 and Button2)
AbortRetryIgnore	(2)	Display **Abort**, **Retry,** and **Ignore** buttons.	(Button1, Button2 and Button3)
YesNoCancel	(3)	Display **Yes**, **No,** and **Cancel** buttons.	(Button1, Button2 and Button3)
YesNo	(4)	Display **Yes** and **No** buttons.	(Button1 and Button2)
RetryCancel	(5)	Display **Retry** and **Cancel** buttons.	(Button1 and Button2)

It is important to consider that the MESSAGE macro updates the parameter "buttons" of "MsgBox" function in the VBS environment with the value obtained by summing the value of parameters "ShowedIcon", ShowedButton" and "DefaultButton".

DefaultButton: [Button1|Button2|Button3]
Indicates the return code output by the dialog used to ask the confirm of the value input by the operator when, instead of selecting a button, the key "Enter" is pressed on the keyboard. The meaning is that of the third group of values for parameter "buttons" of "MsgBox" function in the VBS environment, i.e.:

Button1	(0)	Return Code the same as **OK,** or **Abort,** or **Yes,** or **Retry** button Selected.
Button2	(256)	Return Code the same as **Cancel,** or **Retry,** or **No** button Selected.
Button3	(512)	Return Code the same as **Ignore,** or **Cancel** button Selected.

Of course, the value assigned to parameter "DefaultBotton" must be congruent with the value assigned to parameter "ShowedButton".
It is important to consider that the MESSAGE macro updates the parameter "buttons" of "MsgBox" function in the VBS environment with the value obtained by summing the value of parameters "ShowedIcon", ShowedButton" and "DefaultButton".

2.36 DISCHARGE

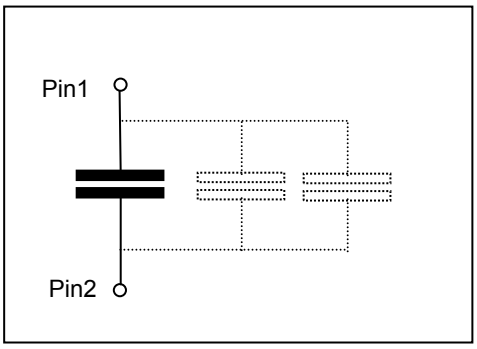

The DISCHARGE macro is used to discharge the capacitors present on the UUT before performing their check. More in general, the DISCHARGE macro is used to discharge a possible capacity present between two channels. The execution of the macro brings the potential of the two channels to the same value using a discharge current defined by a parameter of the macro.

When creating the program, if in the dialog "Advanced Create Program Settings" we select the option: "☑ Analog Component Test", the section "DISCHARGE" is automatically created and the DISCHARGE macro is applied to all the capacitors on the UUT. The capacitor to which the DISCHARGE macro is applied, can be either a single capacitor or a capacitor resulting from possible capacities parallel to the reference capacitor.

To execute the checks, the main parameter are related to the functionality of the component to be checked and to the internal points of the system (channels) where are connected the pins of the component to be tested. The optional parameters are related to the modes by which the macro executes measurements.

Here follows a synthetic description of the macro parameters, describing the main parameters first and then the optional parameters.

DISCHARGE (Value, Pin1, Pin2, Current, Time, Testresult)

Main parameters

Pin1: [0÷N]
Indicates the channel connected to a pole of the capacity to be discharged. The parameter is expressed as a whole number, with possible values included in the interval: 0-N. If parameter "Pin1" is= 0, the macro is not executed.

Pin2: [0÷N]
Indicates the channel connected to the other pole of the capacity to be discharged. The parameter is expressed as a whole number, with possible values included in the interval: 0-N. If parameter "Pin2" is=0, the macro is not executed.

Optional parameters

Value :[0÷1 Farad]
Indicates the capacitive value to be discharged. The parameter is expressed in Farad, with possible values included in the interval: 0-1.

Current: [0÷0,5 Ampere]
Indicates the discharge current value. The parameter is expressed in Ampere, with possible values included in the interval: 0÷0,5.

Time: [0÷1 sec]
Indicates the discharge time and depends on the capacitive value to be discharged. The DISCHARGE macro considers the discharged capacity when at the pins of the capacity it exists a voltage value lower than 50 mV. If, once the time indicated by parameter "Time" has passed, the voltage at the capacity pins has a value higher than 50 mV the macro outputs the result "Fail". If, instead, the voltage value is lower than 50 mV, the output result is "Pass". During the macro execution, the voltage value present at the pins of the capacity to be discharged, is displayed on the digital-analog indicator, in the tag "Program" of the execution environment.

TestResult: [Test Result|Force Pass|Force Fail|Force Skip]
Defines the kind of result to be obtained when executing the macro.

For futher details on this parameter, see ***TestResult*** *in chapter 2.1 "Parameters with common meaning to several system macros".*

2.37 _SOLD1

The _SOLD1 macro identifies the procedure which manages the soldering process of a specific node, or solder joint. To manage the soldering process, the macro schedules a list of arguments or formal parameters used to manage the three steps of the soldering process. For each node to be soldered are generated the actual parameters, i.e. values given to formal parameters when executing the macro.

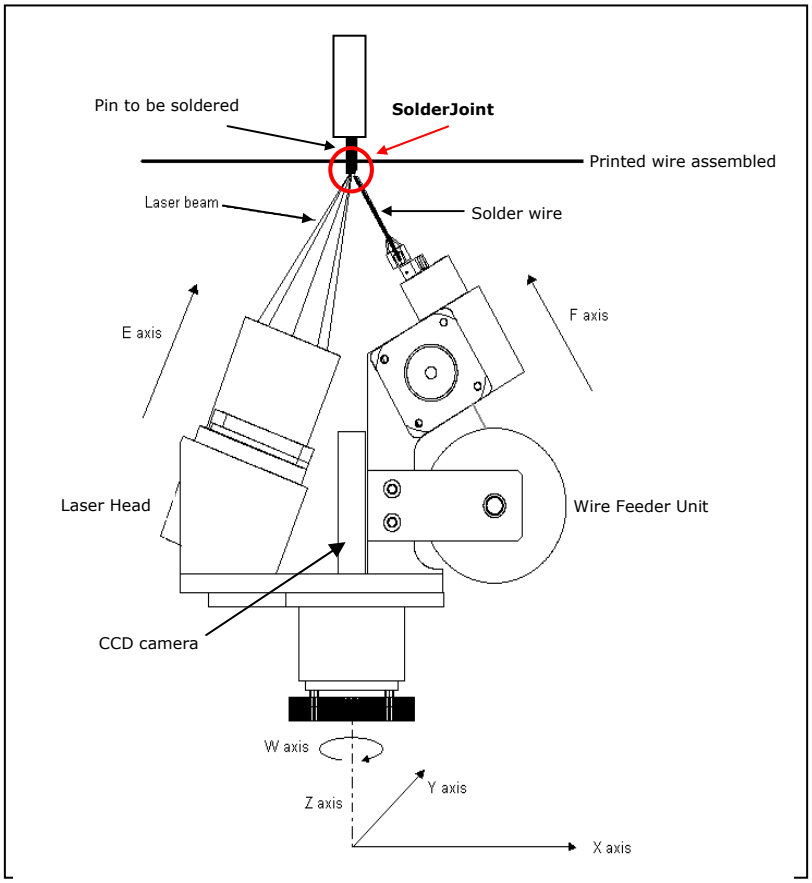

The system which allows to manage the soldering process is different from those used for testing. On such systems the module to control the generators or current/voltage meters is not scheduled.

The available instruments to be managed are: the laser unit which supplies the energy needed to bring the solder joint to the required temperature; the solder alloy wire dispenser, the pyrometer to measure the joint temperature and the laser detector for board planarity.

The macro _SOLD1, instead, is a system macro of the VIVA Software, and the VIVA Software manages both kinds of systems: for testing and soldering.

For further information about the soldering system management can be found in [5] which describes the _SOLD1 macro and the FIREFLY system which allows to execute selective solderings on mounted boards.

For _SOLD1 macro, the actual parameters for every node are calculated according to:

- the physical characteristics of each component of the node:
  - Surface and volume of the portion of printed circuit to be heated
  - Surface and volume of the component pin to be heated
- The physical characteristics of the soldering alloy wire
- some performing characteristics of the system installed:
  - maximum power emitted by the installed laser unit
  - maximum quantity of dispensable wire per second (Typical: 5mm/sec)
  - Maximum rotation speed of the soldering head (Typical: 30°/sec)

Below, a synthetic description of the macro parameters

_SOLD1 **(SolderJoint, PreHeatPw1, PreHeatPw2, PreHeatTime, SoldertPw1, SolderPw2, SoldertTime, PSSoldPw1, PSSoldPw2, PSSoldTime, PreWireNear, SoldWireNear, WireLength, WireLenAdj, SpotDiameter, PinDiameter, HeadRotation, SheadRotation, PCBDistance, PwReductionF, ProcessSimul)**

SolderJoint **[range: 1-n, default: *defined by the system*]**
It's a whole number created by the system which identifies in a way a node of the board to be soldered. This value can not be modified by the user.

PreHeatPw1
PreHeatPw2 **[range: 0-25/60W, step: 0,5W default: *defined by the system*]**
These two parameters indicate the initial and the final value of the power emitted by the laser beam in the pre-heat phase of the joint. In the time interval defined with "PreHeatTime" the power emitted by the laser unit will change from the value defined with "PreHeatPw1" to the value defined with "PreHeatPw2" with a 100msec stem. The higher value of the range depends on the laser unit installed. These two values are generated by the system, according to the physical characteristics of the node. The values can be modified by the user. When changing these values, take into consideration the following note, useful for soldering and post-heat phases as well:

*NOTE: In the soldering process, these parameters influence the density of energy radiated on the spot, which is determined by the ratio between the product of emitted power, the time of emission and the spot surface. (PreHeatPower*PreHeatTime/SpotSurface where PreHeatPower = PreHeatPw1 = PreHeatPw2). A change in these parameters may not imply changes in the soldering process, if we change at the same time the values of other parameters which help defining the density of energy on the spot in this phase.*

PreHeatTime **[range: 0-30sec, step: 0,001sec default: *defined by the system*]**
Indicates the joint pre-heat time value. It's a value generated by the system, according to the physical characteristics of the node; it can be modified by the user. When changing this value, take into consideration the note you find in the PreHeatPower parameter description.

SolderPw1
SolderPw2 **[range: 0-25/60W, step: 0,5W default: *defined by the system*]**
These two parameters indicate the initial and the final value of the power emitted by the laser beam in the soldering phase. In the time interval defined with "SolderTime" the power emitted by the laser unit changes from the value defined with "SolderPw1" to the value defined with "SolderPw2" with a 100msec step. The higher value of the range depends on the laser unit installed. These two values are generated by the system according to the physical characteristics of the node; they can be modified by the user. When changing these values, take into consideration the note you find in the: "PreHeatPw1" and "PreHeatPw2" parameters description.

SolderTime **[range: 0-30sec, step: 0,001sec default: *defined by the system*]**
Indicates the solder time value. It's a value generated by the system according to the physical characteristics of the node; it can be modified by the user. When changing this value take into consideration the note you find in the PreHeatPower parameter description.

PSSoldPw1
PSSoldPw2 **[range: 0-25/60W, step: 0,5W default: *defined by the system*]**
These two parameters indicate the initial and the final value of power emitted by the laser beam on the post-soldering phase. In the time interval defined with "PSSoldTime" the power emitted by the laser unit changes from the value defined with "PSSoldPw1" to the value defined with "PSSoldPw2" with a 100msec step. The higher range value depends on the laser unit installed. These two values are generated by the system according to the physical characteristics of the node; they can be modified by the user. When changing these values, take into consideration the note you find in the "PreHeatPw1" and "PreHeatPw2" parameters description.

PSSoldTime **[range: 0-30sec, step: 0,001sec default: *defined by the system*]**
Indicates the post-soldering phase time value. It's defined by the system according to the physical characteristics of the node; the value can be modified by the user. When changing this value, take into consideration the note you find in the PreHeatPower parameter description.

PreWireNear **[range: 0-10mm, step: 0,1mm default: *defined by the system*]**
Indicates the length of the soldering alloy wire dispensed during the pre-heat phase. The default value of this parameter is the same as "SoldWireNear", i.e. 5,5 mm. This parameter can be modified in order to maintain the soldering alloy away from the solder joint to avoid, for example, the alloy begins to melt during the pre-heat phase. This is particularly true when you have very long pre-heat times, or when you use very high powers or very big spots. To obtain the required effect (keep the soldering alloy away from the solder joint) the value of this parameter must be decreased

SoldWireNear **[range: 0-10mm, step: 0,1mm default: *defined by the system*]**
Indicates the default length of the soldering alloy wire dispensed before executing the soldering phase. This value is fixed to 5,5 mm and corresponds to the position of the soldering alloy before the quantity defined with "WireLength" is dispensed.

NOTE: Usually the two parameters: "PreWireNear" and "SoldWireNear" have the same value. Sometimes, when it's possible that the soldering alloy wire begins to melt, The value of the parameter "PreWireNear" can be lower than the value of parameter: "SoldWireNear."

WireLength **[range: 0-100mm, step: 0,1mm default: *defined by the system*]**
Indicates the length of the soldering alloy wire dispensed during the soldering phase. It's defined by the system according to the physical characteristics of the node. The value can be modified by the user. When changing this value, take into consideration the following note:

NOTE: In the soldering process, this parameter influences the feeding speed of the dispenser, which is defined by the ratio0 between length of wire to be dispensed and soldering phase time. (WireLength/SolderTime). A change in the value of this parameter can not exceed the maximum feeding speed (Max 5mm/sec).

WireLenAdj **[range: 0-n, step:0,1 default: *defined by the system*]**
This parameter influences the length of soldering alloy wire dispensed before executing the three soldering phases. It is a coefficient of correction with respect to "WireNear" parameter value. This value is determined according to the previous node features and to the kind of soldering required. The kind of soldering required is determined by the choice of the profile associated to the board when creating the program.

Spot Diameter **[range: 0,2-3,5mm/0,4-4,5mm, step: 0,1mm default: *defined by the system*]**
Indicates the spot diameter where the emitted laser beam is focused. The value ranges depend on the laser unit installed . It's defined by the system according to the physical characteristics of the node. The value can be modified by the user. The default condition of the spot diameter is 2/10 smaller than the diameter of the pad to be heated. When changing this value, take into consideration the note you find in "PreHeatPower" parameter description.

PinDiameter **[range: 0-∞mm, step: 0,1mm default: *defined by the system*]**
Indicates the pin diameter of the component to be soldered. It's defined by the system according to the physical characteristics of the node. The value can be modified by the user. When changing this value, consider that the parameters related to power emitted by the laser unit and the quantity of alloy dispensed are linked to the default value of this parameter, defined by the system. The default value is determined so that the reference for the soldering head is in the center of the pin and is anyway smaller than the inner diameter of the hole containing the pin.

HeadRotation **[range: -10°-+190°, step: 1° default: *0*]**
Indicates the soldering head rotation executed before performing the three soldering phases. This value can be modified by the user.

SHeadRotation **[range: -10°-+190°, step: 1° default: *0*]**
Indicates the soldering head rotation executed during the soldering phase. This value can be modified by the user. When changing this value, take into consideration the following note:

NOTE: The speed of soldering head rotation is fixed (30°/sec) and does not depend on the soldering time. Therefore, if you want to obtain an effective 30° rotation, the "SolderTime" must be set to a value not lower than 1 sec.

PCBDistance=*value* **[range: 0-50mm, step: 0,5mm default: *0*]**
Indicates the value of distance from board surface to the soldering head. This parameter is used to move the soldering head in case of obstacles on the side to be soldered. The value: 0 corresponds the head positioned so that the terminal part of the dispenser is at 5,5 mm distance from board surface

2.38 _SOLD

The _SOLD macro is used to manage the soldering process in the previous releases of VIVA SW. ***To create soldering programs, the current version of VIVA SW*** *(1.4.0.6)* ***uses macro _SOLD1****.*

This chapter deals with the macro _SOLD to describe its behavior in programs developed with previous VIVA SW releases.
Only a few parameters differ from those descried for macro _SOLD1, anyway you will find here below a description of all _SOLD macro parameters even though already described in the chapter dedicated to macro _SOLD1

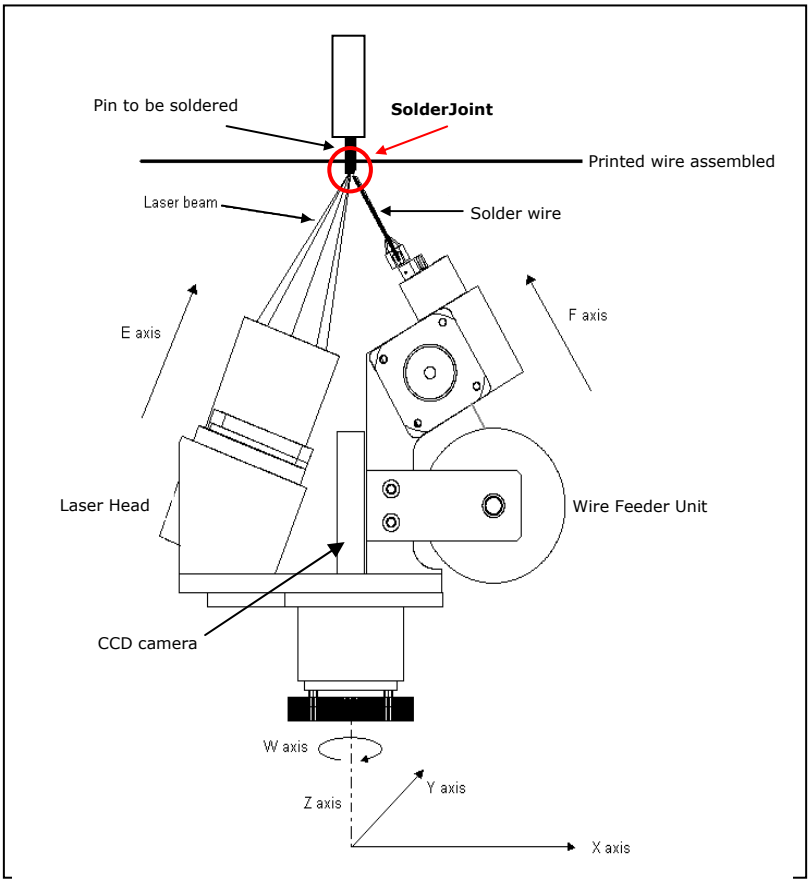

The _SOLD macro identified the procedure which manages the soldering process of a specific node, or solder joint. In order to manage the soldering process, the macro schedules a list of arguments or formal parameters used to manage the three phases of the soldering process. For each node to be soldered, the actual parameters are generated, i.e. values given to formal parameters when executing the macro.

The system for the soldering process management differs from those used for testing. On such systems, the module for generators and current/voltage meters management is not scheduled.

The available instruments to be managed are: the laser unit which supplies the energy needed to bring the solder joint to the required temperature; the soldering alloy wire dispenser; the pyrometer to measure the joint temperature and the board planarity laser detector.

The _SOLD macro, instead, is a VIVA software system macro, and the VIVA Software manages both kinds of systems: for testing and soldering.

Details on system for soldering management can be found in [5] which describes the _SOLD macro and the FIREFLY system, which allows to execute selective solderings on mounted boards.

As far as the macro _SOLD is concerned, the actual parameters for each node are calculated according to:

- the physical characteristics of each node component:
  - Surface and volume of the portion of printed circuit to be heated
  - Surface and volume of the component pin to be heated
- The soldering alloy wire features
- Some performing features of the installed system:
  - Maximum power emitted by laser unit
  - Maximum quantity of soldering alloy wire dispensable per second (Typical: 5mm/sec)
  - Maximum rotation speed of the soldering head (Typical: 30°/sec)

Below, a synthetic description of macro parameters.

_SOLD **(SolderJoint, PreHeatPower, PreHeatTime, SoldertPower, SoldertTime, PSSoldPower, PSSoldTime, WireNear, WireLength, SolderStep, SpotDiameter, PinDiameter, HeadRotation, SheadRotation, PCBDistance, ProcessSimul)**

SolderJoint **[range: 1-n, default: *defined by the system*]**
It's a whole number, defined by the system which identifies in one way a node of the board to be soldered. This value can not be modified by the user.

PreHeatPower **[range: 0-25/60W, step: 0,5W default: *defined by the system*]**
Indicates the value of power emitted by the laser beam in the pre-heat phase of the joint. The range value depends on the laser unit installed. This value is defined by the system according to the physical characteristics of the node; it can be modified by the user. When changing this value, take into consideration the following note, useful for soldering and post-heat phases as well:

NOTE: *In the soldering process, these parameters influence the density of energy radiated on the spot, which is determined by the ratio between the product of power emitted and the time of emission and the spot surface. (PreHeatPower*PreHeatTime/SpotSurface where PreHeatPower = PreHeatPw1 = PreHeatPw2). A change of values in these parameters can cause changes in the soldering process, if we change at the same time the other parameters which contribute to determine the density of energy on the spot in this phase.*

PreHeatTime **[range: 0-30sec, step: 0,001sec default: *defined by the system*]**
Indicates the Pre-heat time value for the joint. It's defined by the system according to the physical characteristics of the node; this value can be modified by the user. When changing this value, take into consideration the note you find in PreHeatPower parameter description.

SolderPower **[range: 0-25/60W, step: 0,5W default: *defined by the system*]**
Indicates the value of power emitted by the laser beam in the soldering phase. The higher range value depends on the laser unit installed. It's a value defined by the system according to the physical characteristics of the node; it can be modified by the user. When changing this value, take into consideration the note you find in the PreHeatPower parameter description.

SolderTime **[range: 0-30sec, step: 0,001sec default: *defined by the system*]**
Indicates the time of the soldering phase of the joint. This value is defined by the system according to the physical characteristics of the node; it can be modified by the user. When changing this value, take into consideration the note you find in the PreHeatPower parameter description.

PSSoldPower **[range: 0-25/60W, step: 0,5W default: *defined by the system*]**
Indicates the value of power emitted by the laser beam in the post-soldering phase. The higher range value depends on the laser unit installed. This value is defined by the system according to the physical characteristics of the node; it can be modified by the user. When changing this value, take into consideration the note you find in PreHeatPower parameter description.

PSSoldTime **[range: 0-30sec, step: 0,001sec default: *defined by the system*]**
Indicates the time of the post-soldering phase. This value is defined by the system, according to the physical characteristics of the node; it can be modified by the user. When changing this value, take into consideration the note you find in the PreHeatPower parameter description.

WireNear **[range: 0-10mm, step: 0,1mm default: *defined by the system*]**
Indicates the default soldering alloy wire length dispensed before executing the soldering phase. This value is fixed to 5,5 mm and represents the soldering alloy position before the quantity defined with "WireLength" is dispensed.

WireLength [range: 0-100mm, step: 0,1mm default: *defined by the system*]
Indicates the soldering alloy wire length dispensed during the soldering phase. This value is defined by the system according to the physical characteristics of the node; it can be modified by the user. When changing this value, take into consideration the following note:

NOTE: In the soldering process, this parameter influences the dispenser speed, which is determined by the ratio between the length of wire to be dispensed and the soldering time value. (WireLength/SolderTime). A value change in this parameter can not exceed the maximum feeding speed (Max 5mm/sec).

SolderStep=*value* **[range: 0-n, step:0,1 default: *defined by the system*]**
This parameter influences the soldering alloy wire length dispensed before executing the three soldering phases. It's a coefficient of correction with respect to the value indicated in "WireNear". This value is determined according to the previous node features and to the kind of soldering required. The kind of soldering required is determined by the choice of the profile associated to the board when creating the program.

SpotDiameter [range: 0,2-3,5mm/0,4-4,5mm, step: 0,1mm default: *defined by the system*]
Indicates the spot diameter value where the emitted laser beam is focused. The value ranges depend on the laser unit installed. This value is defined by the system according to the physical characteristics of the node; it can be modified by the user. The default condition of the spot diameter is 2/10 smaller than the diameter of the pad to be soldered. When changing this value, take into consideration the note you find in "PreHeatPower" parameter description.

PinDiameter [range: 0-∞mm, step: 0,1mm default: *defined by the system*]
Indicates the value of component pin diameter to be soldered. This value is defined by the system according to the physical characteristics of the node; it can be modified by the user. When changing this value, consider that the parameters related to emitted power quantity of alloy dispensed are linked to the default value of this parameter. This default value is determined so that the reference for the soldering head is at the center of the pin and so that the value is anyway lower than the internal diameter of the hole containing the pin.

HeadRotation [range: -10°-+190°, step: 1° default: *0*]
Indicates the soldering head rotation executed before performing the three soldering phases. The value can be modified by the user.

SHeadRotation [range: -10°-+190°, step: 1° default: 0]
Indicates the soldering head rotation executed during the soldering phase; the value can be modified by the user. When changing this value, take into consideration the following note:

NOTE: The soldering head rotation speed is fixed (30°/sec) and does not depend on soldering time. Therefore, if you want to obtain an effective 30° rotation, the "SolderTime" must be set to a value not lower than 1 second.

PCBDistance=*value* **[range: 0-50mm, step: 0,5mm default: *0*]**
Indicates the distance of the soldering head from board surface. This parameter is used to move the soldering head in case of obstacles on the side to be soldered. The value: 0 correspond to the soldering head positioned so that the terminal part of the dispenser is at 5,5 mm from board surface.

ProcessSimul=*value* **[range: 0,1, default: *0*]**
ProcessSimul=*value* **[range: 0,1, default: *0*]**
It's a flag indicating the soldering macro mode execution:

0 The soldering is executed when executing the macro.

1 A soldering process simulation is executed when executing the macro. In this case, no laser beam-which usually melts the soldering alloy- is emitted during the three phases of soldering process.

3 Appendix

This appendix contains::

- A list of system macro and the corresponding parameters
- functions and reference between device/components
- Reference tables of functions and macros
- Crossed references and examples of use of the system macros
- tables containing the default values of macro parameters that are not displayed with the current release of the VIVA Software

3.1 List of system macros and related parameters

The following tables refer the list of parameters for each macro, the field of validity, and possible notes of every parameter.

Tab. 3-1 - VIVA: macros and parameters

3.1.1 RESISTOR (macro written in C language)

RESISTOR	Parameter range	Notes
Value	[0-100.000.000 Ohm]	Value is described in the component DB.
TolPos	[0-100 %]	“TolPos”=”10” if value is not described in the component DB.
TolNeg	[0-100 %]	“TolNeg”=”10” if value is not described in the component DB.
Pin1	[0-N*]	If “Pin1” =0: the macro is not executed.
Pin2	[0-N*]	If “Pin2” =0: the macro is not executed
SensePin1	[0-N*]	If “SensePin1”=0: no channel is in use.
SensePin2	[0-N*]	If “SensePin2”=0: no channel is in use.
GuardPin1	[List of numbers included: 0-N*]	If “GuardPin1”=0: no channel is in use.
GuardPin2	[List of numbers included: 0-N*]	If “GuardPin2”=0: no channel is in use.
SenseGuardPin1	[0-N*]	If “SenseGuardPin1”=0: the internal sense is used.
SenseGuardpin2	[0-N*]	If “SenseGuardPin2”=0: the internal sense is used.
Wire	[Auto|2WIRE|3WIRE|4WIRE| 6WIRE]	“Auto” means tat the assigned value is determined at run time by the VIVA SW.
Quality	[0-100 %]	
MeasureMode	[Auto|DC_ACTIVE|DC_PASSIVE| AC_PASSIVE]	“Auto” means tat the assigned value is determined at run time by the VIVA SW.
TestResult	[Test Result|Force Pass|Force Fail| Force Skip	
MeasureType	[Normal|Average|RecOnError| Maximum|Minimum|Peak ToPeak]	
Recycle	[0-1.000.000]	
Time	[0-1 sec]	
Frequency	[0-100.000 Hertz]	
Volt	[0-100 Volt]	
SettlingWave	[0-100]	
BoardOffset	[-100.000.000-100.000.000]	Default: “BoardOffset”:=”0”
CapSer	[0-1 Farad]	The value is defined with “Autodebug” and “Autolearn”.
CapPar	[0-1 Farad]	The value is defined with “Autodebug” and “Autolearn”.
IndSer	[0-1 Henry]	The value is defined with “Autodebug” and “Autolearn”.
IndPar	[0-1 Henry]	The value is defined with “Autodebug” and “Autolearn”.
ResGuardPin1	[0-100.000.000 Ohm]	if “ResGuardPin1”=0: the parameter is inactive.
CapGuardPin1	[0-1 Farad]	If “CapGuardPin1”=0: the parameter is inactive
ResGuardPin2	[0-100.000.000 Ohm]	If “ResGuardPin2”=0: the parameter is inactive.
CapGuardPin2	[0-1 Farad]	If “CapGuardPin2”=0: the parameter is inactive.

* N=8.192 for systems other than Flying Probes

3.1.2 CAPACITOR (macro written in C language)

CAPACITOR	Parameter range	Notes
Value	[0-1 Farad]	Value is the value described in component DB.
TolPos	[0-100 %]	"TolPos"="10" If the value is not described in the component DB.
TolNeg	[0-100 %]	"TolNeg"="10" If the value is not described in the component DB
Pin1	[0-N*]	If "Pin1"=0: the macro is not executed.
Pin2	[0-N*]	If "Pin2"=0: the macro is not executed.
SensePin1	[0-N*]	If "SensePin1"=0: no channel in use
SensePin2	[0-N*]	If "SensePin2"=0: no channel in use.
GuardPin1	[List of numbers, included: [0-N*]	If "GuardPin1"=0: no channel in use.
GuardPin2	[List of numbers, included: [0-N*]	If "GuardPin2"=0: no channel in use.
SenseGuardPin1	[0-N*]	If "SenseGuardPin1"=0: the internal sense is used.
SenseGuardpin2	[0-N*]	If "SenseGuardPin2"=0: the internal sense is used
Wire	[Auto|2WIRE|3WIRE|4WIRE|6WIRE]	"Auto" means tat the assigned value is determined at run time by the VIVA SW.
Quality	[0-100 %]	
MeasureMode	[Auto|DC_ACTIVE|DC_PASSIVE|AC_PASSIVE]	"Auto" means tat the assigned value is determined at run time by the VIVA SW.
TestResult	[Test Result|Force Pass|Force Fail|Force Skip	0/(Default) if TestResult="Default" => TestResult:= "Test Result"
MeasureType	[Normal|Average|RecOnError|Maximum|Minimum|Peak ToPeak]	
Recycle	[0-1.000.000]	
Time	[0-1 sec]	
Frequency	[0-100.000 Hertz]	
Volt	[0-100 Volt]	
SettlingWave	[0-100]	
BoardOffset	[-1-+1]	Default: "BoardOffset":="0"
ResSer	[0-100.000.000 Ohm]	The value is defined with "Autodebug" and "Autolearn".
ResPar	[0-100.000.000 Ohm]	The value is defined with "Autodebug" and "Autolearn".
ResGuardPin1	[0-100.000.000 Ohm]	If ResGuardPin1=0: the parameter is inactive.
CapGuardPin1	[0-1 Farad]	If CapGuardPin1=0: the parameter is inactive.
ResGuardPin2	[0-100.000.000 Ohm]	If ResGuardPin2=0: the parameter is inactive.
CapGuardPin2	[0-1 Farad]	If CapGuardPin2=0: the parameter is inactive.

* N=8.192 for systems other than Flying Probes

3.1.3 INDUCTOR (macro written in C language)

INDUCTOR	Parameter range	Notes
Value	[0-100 Henry]	Value is the value described in the component DB
TolPos	[0-100 %]	“TolPos”=”10” if the value is not described in the component DB
TolNeg	[0-100 %]	“TolNeg”=”10” if the value is not described in the component DB.
Pin1	[0-N*]	If “Pin1”=0: The macro is not executed
Pin2	[0-N*]	If “Pin2”=0: The macro is not executed
SensePin1	[0-N*]	If “SensePin1”=0: no channel in use.
SensePin2	[0-N*]	If “SensePin2”=0: no channel in use.
GuardPin1	[List of numbers included: [0-N*]	If “GuardPin1”=0: no channel in use.
GuardPin2	[List of numbers included: [0-N*]	If “GuardPin2”=0: no channel in use.
SenseGuardPin1	[0-N*]	If “SenseGuardPin1”=0: the internal sense is used.
SenseGuardpin2	[0-N*]	If “SenseGuardPin2”=0: the internal sense is used .
Wire	[Auto|2WIRE|3WIRE|4WIRE| 6WIRE]	“Auto” means tat the assigned value is determined at run time by the VIVA SW.
Quality	[0-100 %]	
MeasureMode**	[Auto|DC_ACTIVE|DC_PASSIVE| AC_PASSIVE]	“Auto” means tat the assigned value is determined at run time by the VIVA SW.
TestResult	[Test Result|Force Pass|Force Fail| Force Skip	
MeasureType	[Normal|Average|RecOnError| Maximum|Minimum|Peak ToPeak]	
Recycle	[0-1.000.000]	
Frequency	[0-100.000 Hertz]	
Volt	[0-100 Volt]	
SettlingWave	[0-100]	
BoardOffset	[-100-+100]	Default: “BoardOffset”:=”0”
ResSer	[0-100.000.000 Ohm]	The value is defined with “Autodebug” e “Autolearn”.
ResPar	[0-100.000.000 Ohm]	The value is defined with “Autodebug” e “Autolearn”.
ResGuardPin1	[0-100.000.000 Ohm]	If “ResGuardPin1”=0: the parameter is inactive.
CapGuardPin1	[0-1 Farad]	If “CapGuardPin1”=0: the parameter is inactive.
ResGuardPin2	[0-100.000.000 Ohm]	If “ResGuardPin2”=0: the parameter is inactive.
CapGuardPin2	[0-1 Farad]	If “CapGuardPin2”=0: the parameter is inactive.

* N=8.192 For systems others than Flying Probes

3.1.4 TRANSORMER (macro written in VL)

TRANSFORMER	Parameter range	Notes
Name	[String]	Component name existing in CAD data and component DB. (Field “Component” in file *.nod)
ModuleType	[NONE|VL|VBS|VL_DYNAMIC]	For TRANSORMER macro: ModuleType:=”VL”.
TolPos	[0-100 %]	“TolPos”=”10” If the value is not described in component DB.
TolNeg	[0-100 %]	“TolNeg”=”10” If the value is not described in component DB.
PrimaryPin1	[0-N*]	If “PimaryPin1”=0: the macro is not executed.
PrimaryPin2	[0-N*]	If “PrimaryPin2”=0: the macro is not executed.
SecondaryPin1	[0-N*]	If “SecondaryPin1”=0: the macro is not executed.
SecondaryPin2	[0-N*]	If “SecondaryPin2”=0: the macro is not executed.
ClusterName	[String]	For TRANSORMER macro: ClusterName:=”Transformer”.
Kfactot	[0-100]	Kfactor is the value described in the component DB.
MeasureMode	[CURRENT|VOLTAGE]	
TestResult	[Test Result|Force Pass|Force Fail| Force Skip	
MeasureType	[Normal|Average|RecOnError| Maximum|Minimum|Peak ToPeak]	
Recycle	[0-1.000.000]	
Quality	[0-100 %]	
Frequency	[0-100.000 Hertz]	
PrimaryCurrent	[0-0,5 Ampere]	
PrimaryVolt	[0-100 Volt]	
SettlingWave	[0-100]	

* N=8.192 for systems others than Flying Probes

3.1.5 RELAIS (macro written in VL)

RELAYS	Parameter range	Notes
Name	[String]	Component name existing in CAD data and in component DB (Field “Component” in file *.nod)
ModuleType	[NONE|VL|VBS|VL_DYNAMIC]	For TRANSORMER macro: ModuleType:=”VL”.
TolPos	[0-100 %]	“TolPos”=”10” If the value is not described in component DB.
TolNeg	[0-100 %]	TolNeg=”10” If the value is not described in component DB..
CoilPin1	[0-N*]	If “CoilPin1”=”0”: the macro is not executed.
CoilPin2	[0-N*]	If “CoilPin2”=”0”: the macro is not executed.
ContactPin1	[0-N*]	If “ContactPin1”=”0”: the macro is not executed..
ContactPin2	[0-N*]	If “ContactPin2”=”0”: the macro is not executed.
ClusterName	[String]	For RELAIS macro: ClusterName: =”Relay”.
ContactImpedance	[-1,0-100.000.000 Ohm]	1/(-1) if “ContactImpedance”=”-1” The value is calculated “run-time” accordion to parameters “ContactVoltage” and “ContactCurrent”
PowerCoil	[ON|OFF]	
CoilVoltage	[0-100 Volt]	-1/(-1) if “CoilVoltage”=”-1” => “CoilVoltage”=”10”
CoilCurrent	[0-0,5 Ampere]	-1/(-1) if “CoilCurrent”=”-1” => “CoilCurrent”=”0.01”
CoilTime	[0-1 sec]	-1/(-1) if “CoilTime”=”-1” => CoilTime=”0.01”
ContactVoltage	[0-100 Volt]	-1/(-1) if “ContactVoltage”=”-1” => “ContactVoltage”=”0.5”
ContactCurrent	[0-0,5 Ampere]	-1/(-1) if “CoilCurrent”=”-1” => “CoilCurrent”=”0.01”
ContactTime	[0-1 sec]	Default value:= 0.001
TestResult	[Test Result|Force Pass|Force Fail| Force Skip	
MeasureType	[Normal|Average|RecOnError| Maximum|Minimum|Peak ToPeak]	
Recycle	[0-1.000.000]	
Quality	[0-100 %]	
CapPar	[0-1 Farad]	The value is defined with “Autodebug” e “Autolearn”.

* N=8.192 For systems others than Flying Probes

3.1.6 DIODE (DIODE_INV, DIODE2, DIODE2_INV) (macro written in C language)

DIODE (DIODE_INV, DIODE2, DIODE2_INV)	Parameter range	Notes
Value	[0-100 V]	Value is the value described in the component DB.
TolPos	[0-100 %]	"TolPos"="10" If the value is not described in component DB.
TolNeg	[0-100 %]	"TolNeg"="10" If the value is not described in component DB.
Anode	[0-100 %]	If "Anode"="0": the macro is not executed..
Cathode	[0-N*]	If "Cathode"="0": the macro is not executed...
SenseAnode	[0-N*]	If "SenseAnode"="0": no channel in use
SenseCatode	[0-N*]	If "SenseAnode"="0": no channel in use.
GuardAnode	[List of numbers included in 0-N*]	If "GuardAnode"="0": no channel in use.
GuardCatode	[List of numbers included in 0-N*]	If "GuardCatode"="0": no channel in use.
SenseGuardAnode	[0-N*]	If "SenseGuardAnode"="0": the internal sense is used.
SenseGuardCatode	[0-N*]	If "SenseGuardCatode"="0": the internal sense is used
Wire	[Auto|2WIRE|3WIRE|4WIRE| 6WIRE]	"Auto" means tat the assigned value is determined at run time by the VIVA SW.
Quality	[0-100 %]	
JunctionMode**	[Direct|Invert]	JunctionMode:="Direct" for DIODE and DIODE2 JunctionMode:="Invert" for DIODE_INV and DIODE2INV
TestResult	[Test Result|Force Pass| Force Fail|Force Skip	
MeasureType	[Normal|Average|RecOnError| Maximum|Minimum|Peak ToPeak]	
Recycle	[0-1.000.000]	
Time	[0-1 sec]	
Current	[0-0,5 Ampere]	
ResPar	[0-100.000.000 Ohm]	The value is defined with "Autodebug" e "Autolearn".
CapPar	[0-1 Farad]	The value is defined with "Autodebug" e "Autolearn".
ResGuardPin1	[0-100.000.000 Ohm]	If "ResGuardPin1"="0": The parameter is inactive.
CapGuardPin1	[0-1 Farad]	If "CapGuardPin1"="0: The parameter is inactive.
ResGuardPin2	[0-100.000.000 Ohm]	If "ResGuardPin2"="0": The parameter is inactive
CapGuardPin2	[0-1 Farad]	If "CapGuardPin2"="0": The parameter is inactive

* N=8.192 For systems others than Flying Probes

** The parameter "JunctionMode" has a default value: "Direct" for DIODE and DIODE2 macros, while it has value: "Invert" for "DIODE_INV" and "DIODE2_INV" macros.

3.1.7 ZENER (ZENER_DIR) (macro written in C language)

ZENER (ZENER_DIR)	Parameter range	Note or default value
Value	[0-100 V]	Value is the value described in the component DB.
TolPos	[0-100 %]	“TolPos”=”10” if the value is not described in the component DB.
TolNeg	[0-100 %]	“TolNeg”=”10” if the value is not described in the component DB.
Anode	[0-N*]	If “Anode”=”0”: the macro is not executed.
Cathode	[0-N*]	If “Cathode”=”0”: the macro is not executed.
SenseAnode	[0-N*]	If “SenseAnode”=”0”: no channel is in use.
SenseCatode	[0-N*]	If “SenseAnode”=”0”: no channel is in use.
GuardAnode	[List of numbers, included:0-N*]	If “GuardAnode”=”0”: no channel is in use.
GuardCatode	[List of numbers, included:0-N*]]	If “GuardCatode”=”0”: no channel is in use.
SenseGuardAnode	[0-N*]	If “SenseGuardAnode”=”0”: internal sense in use.
SenseGuardCatode	[0-N*]	If “SenseGuardCatode”=”0”: internal sense in use.
Wire	[Auto|2WIRE|3WIRE|4WIRE| 6WIRE]	“Auto” means tat the assigned value is determined at run time by the VIVA SW.
Quality	[0-100 %]	
JunctionMode**	[Direct|Zener]	JunctionMode:=“Direct” for ZENER_DIR macro JunctionMode:=“Zener” for ZENER macro
TestResult	[Test Result|Force_Pass| Force_Fail|Force_Skip	
MeasureType	[Normal|Average|RecOnError| Maximum|Minimum|Peak ToPeak]	
Recycle	[0-1.000.000]	
Time	[0-1 sec]	
Current	[0-0,5 Ampere]	
ResPar	[0-100.000.000 Ohm]	value determined with “Autodebug” and “Autolearn”.
CapPar	[0-1 Farad]	value determined with “Autodebug” and “Autolearn”.
ResGuardPin1	[0-100.000.000 Ohm]	If “ResGuardPin1”=”0”: inactive parameter.
CapGuardPin1	[0-1 Farad]	If “CapGuardPin1”=”0”: inactive parameter.
ResGuardPin2	[0-100.000.000 Ohm]	If “ResGuardPin2”=”0”: inactive parameter.
CapGuardPin2	[0-1 Farad]	If “CapGuardPin2”=”0”: inactive parameter.

* N=8.192 for systems other that Flying Probes

** The parameter “JunctionMode” has “Direct” as default value for the ZENER_DIR macro, while it has “Zener” value for the macro “ZENER”.

3.1.8 SCR_ON (SCR_OFF, SCR_ON_INV, SCR_OFF_INV) (macro written in VL)

SCR_ON (SCR_OFF, SCR_ON_INV, SCR_OFF_INV)	Parameter range	Note or default value
Name	[String]	Component name included in the CAD data and in component DB. (Field “Component” file *.nod)
ModuleType	[NONE|VL|VBS|VL_DYNAMIC]	For macros SCR*: ModuleType:=”VL”.
TolPos	[0-100 %]	“TolPos”=”10” If the value is not described in the component DB.
TolNeg	[0-100 %]	“TolNeg”=”10” If the value is not described in the component DB.
Gate	[0-N*]	If “Gate”=”0”: the macro is not executed.
Cathode	[0-N*]	If “Cathode”=”0”: the macro is not executed.
Anode	[0-N*]	If “Anode”=”0”: the macro is not executed.
ClusterName	[String]	For macro: SCR*: ClusterName:=”SCR”.
Value	[0-100 V]	Value is the value described in the component DB.
MeasureMode	[On | Off | Inv_On | Inv_Off]	Default values: MeasureMode=”On” for macro:SCR_ON MeasureMode=”Off” for macro:SCR_OFF MeasureMode=”Inv_On” for macro:SCR_ON_INV MeasureMode=”Inv_Off” for macro:SCR_OFF_INV
TestResult	[Test Result | Force Pass | Force Fail | Force Skip	
MeasureType	[Normal|Average|RecOnError|Maximum|Minimum|Peak ToPeak]	
Recycle	[0-1.000.000]	
Quality	[0-100 %]	
Time	[0-1 sec]	
InCurrent	[0-0,5 Ampere]	-1/(-1) if “InCurrent”=”-1” => “InCurrent”=”0.001”
InVolt	[0-100 Volt]	-1/(-1) if “InVolt=”-1” => “InVolt”=”5”
OutCurrent	[0-0,5 Ampere]	-1/(-1) if “OutCurremt”=”-1” => “OutCurrent”=”0.01”
OutVolt	[0-100 Volt]	-1/(-1) if “OuTVolt=”-1” => “OutVolt”=”10”

* N=8.192 for systems other than Flying Probes

3.1.9 TRIAC_ON (TRIAC_OFF, TRIAC_ON_INV, TRIAC_OFF_INV) (macro written in VL)

TRIAC_ON (TRIAC_OFF, TRIAC_ON_INV, TRIAC_OFF_INV)	Parameter range	Note or default value
Name	[String]	Component name included in the CAD data and in component DB. (Field “Component” file *.nod)
ModuleType	[NONE|VL|VBS|VL_DYNAMIC]	For macros TRIAC*: ModuleType:=”VL”.
TolPos	[0-100 %]	TolPos=”10” If the value is not described in the component DB .
TolNeg	[0-100 %]	TolNeg=”10” If the value is not described in the component DB .
Gate	[0-N*]	If “Gate”=0: the macro is not executed.
Terminal1	[0-N*]	If “Terminal1”=0: the macro is not executed.
Terminal2	[0-N*]	If “Terminal2”=0: the macro is not executed.
ClusterName	[String]	For macro: TRIAC*: ClusterName:=”Triac”.
Value	[0-100 V]	Value is the value described in the component DB.
MeasureMode	[On | Off | Inv_On | Inv_Off]	Default values: MeasureMode=”On” for macro:TRIAC_ON MeasureMode=”Off” for macro:SCR_OFF MeasureMode=”Inv_On” for macro:SCR_ON_INV MeasureMode=”Inv_Off” for macro:TRIAC_OFF_INV
TestResult	[Test Result | Force Pass | Force Fail | Force Skip	
MeasureType	[Normal|Average|RecOnError| Maximum|Minimum|Peak ToPeak]	
Recycle	[0-1.000.000]	
Quality	[0-100 %]	
Time	[0-1 sec]	-1/(-1) if “Time”=”-1” => “Time”=”0,01”
InCurrent	[0-0,5 Ampere]	-1/(-1) if “Incurrent”=”-1” => “InCurrent”=”0.001”
InVolt	[0-100 Volt]	-1/(-1) if “InVolt=”-1” => “InVolt”=”5”
OutCurrent	[0-0,5 Ampere]	-1/(-1) if “OutCurremt”=”-1” => “OutCurrent”=”0.01”
OutVolt	[0-100 Volt]	-1/(-1) if “OuTVolt=”-1” => “OutVolt”=”10”

* N=8.192 for systems other than Flying Probes

3.1.10 TRANSISTOR (macro written in C language)

TRANSISTOR	Parameter range	Note or default value
Technology	[Auto|BJT NPN|BJT PNP|MOS N| MOS P]	Kind of component.
ValueOFF	[0-100 Volt]	"ValueOFF"=0.75*"Volt_C_D" If the value is not specified in the macro DB.
ValueON	[0-100 Volt]	"ValueON"=0.25*"Volt_C_D" If the value is not specified in the macro DB.
Emitter_Source	[0-N*]	If "Emitter_Source"="0": the macro is not executed.
Base_Gate	[0-N*]	If "Base_Gate"="0": the macro is not executed.
Collector_Drain	[0-N*]	If "Collector_Drain"="0": the macro is not executed.
GuardBase	[List of numbers between 0-N*]	If "GuardBase"="0": no channel is in use.
GuardCollector	[List of numbers between 0-N*]	If "GuardCollector"="0": no channel is in use.
Wire	[Auto|2WIRE|3WIRE|]	
Quality	[0-100 %]	
TestMode	[ON|OFF|ON-OFF*]	
TestResult	[Test Result|Force_Pass| Force_Fail|Force_Skip	
MeasureType	[Normal|Average|RecOnError| Maximum|Minimum|Peak ToPeak]	
Recycle	[0-1.000.000]	
Time	[0-1 sec]	
Volt_C_D	[0-100 Volt]	
Current_C_D	[0-0.5 Ampere]	
Volt_B_G	[0-100 Volt]	Default value :=0 in "Function & Macro data base"
Current_B_G	[0-0.5 Ampere]	Default value :=0 in "Function & Macro data base"
ResPar_C_D	[0-100.000.000 Ohm]	Value determined with "Autodebug" and "Autolearn".
CapPar_C_D	[0-1 Farad]	Value determined with "Autodebug" and "Autolearn".
ResPar_B_G	[0-100.000.000 Ohm]	Value determined with "Autodebug" and "Autolearn".
CapPar_B_G	[0-1 Farad]	Value determined with "Autodebug" and "Autolearn".

* N=8.192 For systems other than Flying Probes

3.1.11 FNODE (macro written in C language)

FNODE	Parameter range	Note or default value
TolPosI	[0-100 %]	
TolNegI	[0-100 %]	
TolPosPha	[0-100 %]	
TolNegPha	[0-100 %]	
SignalPin	[0-N*]	If “SignalPin”=”0”: the macro is not executed.
RefPin	[0-N*]	If “RefPin”=”0”: the macro is not executed
SignalGuard	[0-N*]	If “SignalGuard”=”0”: no channel is in use.
Wire	[Auto|2WIRE|3WIRE|]	“Auto” means tat the assigned value is determined at run time by the VIVA SW.
Quality	[0-100 %]	
TestResult	[Test Result|Force Pass| Force Fail|Force Skip	
MeasureType	[Normal|Average|RecOnError| Maximum|Minimum|Peak ToPeak]	
Recycle	[0-1.000.000]	
Volt	[0-100 Volt]	
PointWF	[2-1.024]	
BurstNr	[1-100]	
StartFreq	[1-50.000.000]	
StopFreq	[1-50.000.000]	
SettlingWave	[0-100]	
ViewMode	[Current|Phase|CapPar|ResPar IndPar|CapSer|ResSer|IndSer]	
ScopeMode	[Time|FFT|I Module|I Phase]	
ViewWFNumber	[1- BurstNr]	
SelectView	[ViewMode|Resistor|CapPacitor| Inductor|DirectJunction| InvertJunction	
Scale	[Lin|Log]	
RangeI		

* N=8.192 for systems other than Flying Probes

3.1.12 JUMPER macro written in VNL)

JUMPER	Parameter range	Note
Mode	[CLOSE|OPEN]	
Value	[0-10000000 Ohm]	If “Value”=”0”, according to parameter “Mode” is used the value set in the dialogue “Advanced Program Settings”.
Pin1	[0-N*]	If “Pin1”=”0”: the macro is not executed.
Pin2	[0-N*]	If “Pin2”=”0”: the macro is not executed.
TestResult	[Test Result|Force Pass| Force Fail|Force Skip]	
MeasureType	[Normal|Average|RecOnError| Maximum|Minimum|Peak ToPeak]	
Recycle	[0-1.000.000]	
Time	[0-1 sec]	
Volt	[0-100V]	If “Volt”=”0”, according to the parameter “Mode” is used the value set in the dialogue “Advanced Program Settings”.
CapPar	[0-1 Farad]	The value is determined with “Autodebug” and “Autolearn”.

* N=8.192 for systems other than Flying Probes

3.1.13 FUSE (macro written in VNL)

FUSE	Parameter range	Note
FuseCurrent	[0-100 Ampere]	Value is the value described in the component DB.
Value	[0-100 Volt]	
TolPos	[0-100 %]	“TolPos”=”10” if not described in the component DB.
TolNeg	[0-100 %]	“TolNeg”=”10” if not described in the component DB.
Pin1	[0-N*]	If “Pin1”=“0”: the macro is not executed.
Pin2	[0-N*]	If “Pin2”=“0”: the macro is not executed.
SensePin1	[0-N*]	If “SensePin1”=“0”: no channel is in use.
SensePin2	[0-N*]	Se “SensePin2”=“0”: no channel is in use.
Wire	[Auto|2WIRE|3WIRE|4WIRE|6WIRE]	“Auto” means that the value assigned to the parameter is determined at run time by SW VIVA
TestResult	[Test Result|Force_Pass|Force_Fail|Force_Skip]	
MeasureType	[Normal|Average|RecOnError|Maximum|Minimum|PeakToPeak]	
Recycle	[0-1.000.000]	
Time	[0-1 sec]	

* N=8.192 for systems other than Flying Probes

3.1.14 CRYSTAL (macro written in VL)

CRYSTAL	Parameter range	Note
Name	[String]	Component name found in CAD data and in component DB. (Field “Component” in file *.par)
ModuleType	[NONE|VL|VBS|VL_DYNAMIC]	For macro CRYSTAL: ModuleType:=”VL”.
TolPos	[0-100 %]	TolPos=”10” If value is not described in component DB.
TolNeg	[0-100 %]	TolNeg=”10” If value is not described in component DB.
RefPin	[0-N*]	If RefPin=0: the macro is not executed.
OutPin	[0-N*]	If OutPin=0: the macro is not executed.
ClusterName	[String]	For macro CRYSTAL: ClusterName:=”Crystal”.
Value	[0-10000000 Hz]	
PowerSet	[ON|OFF]	
PowerPin	[0-N*]	If PowerPin=0: the macro is not executed.
TestResult	[Test Result|Force_Pass| Force_Fail|Force_Skip]	
MeasureType	[Normal|Average|RecOnError| Maximum|Minimum|PeakToPeak]	
Recycle	[0-1.000.000]	
TriggerLevel	[-100-+100 V]	
PowerVoltage	[0-+100 V]	
PowerCurrent	[0-0,5 A]	
GateTime	[0-1 sec]	

* N=8.192 for system others than Flying Probes

3.1.15 OPTOISOLATOR (macro written in VL)

OPTOISOLATOR	Parameter range	Note
Name	[String]	Component name present in the CAD data and in the component DB. (Domain “Component” in file *.par)
ModuleType	[NONE|VL|VBS|VL_DYNAMIC]	For OPTOISOLATORmacro: ModuleType:=”VL”.
TolPos	[0-100 %]	TolPos=”10” If the value is not described in the component DB.
TolNeg	[0-100 %]	TolNeg=”10” If the value is not described in the component DB.
InPin1	[0-N*]	If InPin1=0: the macro is not executed.
InPin2	[0-N*]	If InPin2=0: the macro is not executed.
OutPin1	[0-N*]	If OutPin1=0: the macro is not executed.
OutPin2	[0-N*]	If OutPin2=0: the macro is not executed.
ClusterName	[String]	For OPTOISOLATOR macro: ClusterName:=”Opto”.
ValueOn	[0-100 V]	
ValueOff	[0-100 V]	
InCurrent	[0-0,5 A]	
InVolt	[0-100 V]	
OutCurrent	[0-0,5 A]	
OutVolt	[0-100 V]	
MeasureMode	[ON|OFF]	
DisabledTest	[NONE|ON|OFF]	
TestResult	[Test Result|Force_Pass| Force_Fail|Force_Skip]	
MeasureType	[Normal|Average|RecOnError| Maximum|Minimum|PeakToPeak]	
Recycle	[0-1.000.000]	
Time	[0-1 sec]	

* N=8.192 for systems other than Flying Probes

3.1.16 VOLTAGE_REG (macro written in VL)

VOLTAGE_REG	Parameter range	Note
Name	[String]	Component name present in the CAD data and in the component DB. (Domain “Component” in file *.par)
ModuleType	[NONE|VL|VBS|VL_DYNAMIC]	For VOLTAGE_REG macro: ModuleType:=”VL”.
TolPos	[0-100 %]	TolPos=”10” If the value is not described in the component DB
TolNeg	[0-100 %]	TolNeg=”10” If the value is not described in the component DB.
InPin	[0-N*]	If InPin=0: the macro is not executed.
RefPin	[0-N*]	If RefPin=0: the macro is not executed
OutPin	[0-N*]	If OutPin=0: the macro is not executed.
ClusterName	[String]	
Value	[-100-+100 V]	For VOLTAGE_REG macro: ClusterName:=”Regulator”.
PowerSet	[ON|OFF]	Defines
TestResult	[Test Result|Force_Pass| Force_Fail|Force_Skip]	
MeasureType	[Normal|Average|RecOnError| Maximum|Minimum|PeakToPeak]	
Recycle	[0-1.000.000]	
Time	[0-1 sec]	
InCurrent	[0-0,5 A]	If “InVolt” is not included in the interval:: [-10-+10 V] the “InCurrent” range is [0-0,1 A]
InVolt	[-100-+100 V]	

* N=8.192 for systems other than Flying Probes

3.1.17 POWER (macro written in VL)

POWER	Parameter range	Note
Name	[String]	“POWERON_COMP” in section “POWERON” “POWEROFF_COMP” in section “POWEROFF”
ModuleType	[NONE|VL|VBS|VL_DYNAMIC]	For POWER macro: ModuleType:=”VL”.
PowerNumber		Not managed up to VIVA rel 1.4.0.3
ClusterName	[String]	For POWER macro: ClusterName:=”Power”.
FinalDelay	[0-1 sec]	
PowerView	[0-32]	
SysPowerName		Not managed up to VIVA rel 1.4.0.3
CheckPower	[NO|YES]	
PowerMode	[ON|OFF]	

* N=8.192 For systems other than Flying Probes

3.1.18 POWER_CHECK (macro written in VL)

POWER_CHECK	Parameter range	Note
Name	[String]	
ModuleType	[NONE|VL|VBS|VL_DYNAMIC]	For POWER_CHECK macro: ModuleType:=”VL”.
Value	[0-100 Volt]	
TolPos	[0-100 %]	TolPos=”10” if value is not described in component DB.
TolNeg	[0-100 %]	TolNeg=”10” if value is not described in component DB.
PinPoitive	[0-N*]	If InPin=0: the macro is not executed.
PinNegative	[0-N*]	If RefPin=0: the macro is not executed.
ClusterName	[String]	For POWER_CHECK macro: ClusterName:=”PwCheck”.
TestResult	[Test Result|Force_Pass| Force_Fail|Force_Skip]	
MeasureType	[Normal|Average|RecOnError| Maximum|Minimum|PeakToPeak]	
Recycle	[0-1.000.000]	
StrobeTime	[0-1 sec]	

* N=8.192 For systems other than Flying Probes

3.1.19 AUTIC (macro written in C language)

AUTIC	Parameter range	Note
Value	[0-100 V]	Value determined with “Autodebug” and “Autolearn”.
TolPos	[0-100 %]	In phase “Create Program” the parameter is set to 30.
TolNeg	[0-100 %]	In phase “Create Program” the parameter is set to 30.
Anode	[0-N*]	If Anode=”0”: the macro is not executed.
Catode	[0-N*]	If Catode=”0”: the macro is not executed.
SenseAnode	[0-N*]	If SenseAnode=”0”: no channel is in use
SenseCatode	[0-N*]	If SenseAnode=”0”: no channel is in use.
Wire	[Auto|2WIRE|3WIRE|4WIRE| 6WIRE]	“Auto” means that the value of the parameter is determined at run time by VIVA SW
Quality	[0-100 %]	
JunctionMode	[Direct|Invert]	In the “Create Program” phase, the parameter is set to “Direct”.
TestResult	[Test Result|Force_Pass| Force_Fail|Force_Skip]	
MeasureType	[Normal|Average|RecOnError| Maximum|Minimum|Peak ToPeak]	
Recycle	[0-1.000.000]	
Time	[0-1 sec]	
Current	[0-0,5 Ampere]	
ResPar	[0-100.000.000 Ohm]	Value determined with “Autodebug” and “Autolearn”.
CapPar	[0-1 Farad]	Value determined with “Autodebug” and “Autolearn”.

* N=8.192 for systems other than Flying Probes

3.1.20 JSCAN (macro written in C language)

JSCAN	Parameter range	Note
Value	[0-100 V]	Value determined with “Autodebug” and “Autolearn”.
TolPos	[0-100 %]	In “Create Program” phase, parameter set to 30.
TolNeg	[0-100 %]	In “Create Program” phase, parameter set to 30.
RefPin	[0-N*]	If RefPin=”0”: the macro is not executed.
TestPin	[0-N*]	If TestPin=”0”: the macro is not executed.
GroundPin	[0-N*]	If GroundPin=”0”: the macro is not executed.
SenseGroundPin	[0-N*]	If SenseGroundPin=”0”: no channel is in use.
Frequency		
CurrentDRA		
CurrentDRB		
TestResult	[Test Result|Force_Pass| Force_Fail|Force_Skip]	
MeasureType	[Normal|Average|RecOnError| Maximum|Minimum|Peak ToPeak]	
Recycle	[0-1.000.000]	
Quality	[0-100 %]	
SettlingWave		
ResParRefPin	[0-100.000.000 Ohm]	Value determined with “Autodebug” and “Autolearn”.
ResParTestfPin	[0-100.000.000 Ohm]	Value determined with “Autodebug” and “Autolearn”.
CapParRefPin	[0-1 Farad]	Value determined with “Autodebug” and “Autolearn”.
CapParTestPin	[0-1 Farad]	Value determined with “Autodebug” and “Autolearn”.
Split	[0-1.000.000	
TestPinIso	[NO|YES]	

* N=8.192 for systems other than Flying Probes

3.1.21 OPENFIX (macro written in C language)

OPENFIX	Parameter range	Note
Sensor	[0-64*]	If “Sensor”=”0”: the mobile sensor is used.
SensorCh	[0-N*]	Relevant parameter if “Sensor”=”0”:
TestPin	[0-N*]	If TestPin=”0”: the macro is not executed.
RefPin	[0-N*]	If RefPin=”0”: the macro is not executed.
Value	[0-100 V]	Value determined with “Autodebug” and “Autolearn”.
TolPos	[0-100 %]	In “Create Program” phase, parameter set to “80”.
TolNeg	[0-100 %]	In “Create Program” phase, parameter set to “30”.
Quality	[0-100 %]	
MeasureMode	[RMS Low|AC Low|RMS High AC High]	
TestResult	[Test Result|Force_Pass| Force_Fail|Force_Skip]	
MeasureType	[Normal|Average|RecOnError| Maximum|Minimum|Peak ToPeak]	
Recycle	[0-1.000.000]	
Volt	[0-100 V]	
Frequency	[0-100.000 Hz]	
Time	[0-1 sec]	

* N=8.192 for systems other than Flying Probes

3.1.22 CONTINUITY (macro written in C language)

CONTINUITY	Parameter range	Note
Value	[0-100.000.000 Ohm]	
Pin1	[0-N*]	If Pin1=0: the macro is not executed.
Pin2	[0-N*]	Se Pin2=0: the macro is not executed.
TestResult	[Test Result|Force_Pass| Force_Fail|Force_Skip]	
MeasureType	[Normal|Average|RecOnError| Maximum|Minimum|PeakToPeak]	
Recycle	[0-1.000.000]	If SensePin1=0: no channel is in use.
Time	[0-1 sec]	Se SensePin2=0: no channel is in use..
Volt	[0-100 Volt]	
CapPar	[0-1 Farad]	Value defined with “Autodebug” and “Autolearn”.

* N=8.192 for systems other than Flying Probes

3.1.23 ISOLATION (macro written in C language)

ISOLATION	Parameter range	Note
Value	[0-100.000.000 Ohm]	
Pin1	[0-N*]	If Pin1=0: the macro is not executed.
Pin2	[0-N*]	If Pin2=0: the macro is not executed.
GuardPin1	[List of numbers: 0-N*]	If GuardPin1=0: no channel is in use.
GuardPin2	[List of numbers: 0-N*]	If GuardPin2=0: no channel is in use.
Wire	[Auto|2WIRE|3WIRE|]	"Auto" means: value determined in run time by VIVA sw
SensePin2	[0-N*]	If SensePin2=0: no channel is in use.
TestResult	[Test Result|Force_Pass| Force_Fail|Force_Skip]	
MeasureType	[Normal|Average|RecOnError| Maximum|Minimum|PeakToPeak]	
Recycle	[0-1.000.000]	If SenseGuardPin1=0: internal sense used.
Time	[0-1 sec]	If SenseGuardPin2=0: internal sense used.
Wire	[Auto|2WIRE|3WIRE|4WIRE|6WIRE]	"Auto" means: value determined in run time by VIVA sw
Quality	[0-100 %]	
MeasureMode	[Auto|DC_ACTIVE|DC_PASSIVE| AC_PASSIVE]	"Auto" means: value determined in run time by VIVA sw
TestResult	[Test Result|Force_Pass| Force_Fail|Force_Skip]	
MeasureType	[Normal|Average|RecOnError| Maximum|Minimum|PeakToPeak]	
Recycle	[0-1.000.000]	
Time	[0-1 sec]	
Volt	[0-100 Volt]	
CapPar	[0-1 Farad]	Value defined with "Autodebug" and "Autolearn".
ResGuardPin1	[0-100.000.000 Ohm]	If ResGuardPin1=0: inactive parameter.
CapGuardPin1	[0-1 Farad]	If CapGuardPin1=0: inactive parameter.
ResGuardPin2	[0-100.000.000 Ohm]	If ResGuardPin2=0: inactive parameter.
CapGuardPin2	[0-1 Farad]	If CapGuardPin2=0: inactive parameter.

* N=8.192 for systems other than Flying Probes

3.1.24 SHORT (macro written in C language)

SHORT	Parameter range	Note
StartCh	[0-N*]	If StartCh=0: the macro is not executed.
StopCh	[0-N*]	If StopCh=0: the macro is not executed.
FamilyNr	[0-N*]	
Value	[3-100.000.000 Ohm]	
TestResult	[Test Result|Force Pass| Force Fail|Force Skip]	
Time	[0-1 sec]	
Volt	[0-100 Volt]	
ViewChannel	[0-N*]	

* N=8.192 for systems other than Flying Probes

3.1.25 CONTACT (macro written in C language)

CONTACT	Parameter range	Note
StartCh	[0-N*]	If “StartCh”=”0”: the macro is not executed.
StopCh	[0-N*]	If “StopCh”=”0”: the macro is not executed.
FamilyNr	[0-N*]	
Value	[3-100.000.000 Ohm]	
TestResult	[Test Result|Force Pass| Force Fail|Force Skip]	
Time	[0-1 sec]	
Volt	[0-100 Volt]	
ViewChannel	[0-N*]	

* N=8.192 for systems other than Flying Probes

3.1.26 COMPARATOR (macro written in VL)

COMPARATOR	Parameter range	Note
Name	[String]	Component name present in CAD data and component DB. (Field “Component” in file *.par)
ModuleType	[NONE|VL|VBS|VL_DYNAMIC]	For COMPARATOR macro: ModuleType:=”VL”.
TolPos	[0-100 %]	“TolPos”=”10” if value not described in component DB.
TolNeg	[0-100 %]	“TolNeg”=”10” if value not described in component DB.
InPositive	[0-N*]	If “InPositive”=”0”: the macro is not executed.
InNegative	[0-N*]	If “InNegative”=”0”: the macro is not executed.
GndPin	[0-N*]	If “GndPin”=”0”: the macro is not executed.
OutPin	[0-N*]	If “OutPin”=”0”: the macro is not executed.
ClusterName	[String]	For COMPARATOR macro: “ClusterName”:=”Comparator”.
ValueHigh	[-100-+100 V]	
ValueLow	[-100-+100 V]	
Gain	[0-10.000]	
TestResult	[Test Result|Force_Pass| Force_Fail|Force_Skip]	
MeasureType	[Normal|Average|RecOnError| Maximum|Minimum|PeakToPeak]	
Recycle	[0-1.000.000]	
Frequency	[0-100.000 Hz]	
InCurrent	[0-0,5 A]	
DeltaVPlus	[0-+10 V]	
DeltaVMinus	[0-+10 V]	
OffsetV	[-10-+10 V]	
Quality	[0-100 %]	
SettlingWave	[0-100]	
VDrop	[-100-+100 V]	
ValueVcc	[-100-+100 V]	
ValueVdd	[-100-+100 V]	
View	[0|1|2]	
ViewMeas	[HIGH|LOW]	

* N=8.192 for systems other than Flying Probes

3.1.27 OP_AMP_VF (macro written in VL)

OP_AMPF_VF	Parameter range	Note
Name	[String]	Component name present in CAD data and in component DB. (field “Component” in file *.par)
ClusterName	[String]	For OP_AMP_VF macro: “ClusterName”:=”opafollow”.
ModuleType	[NONE|VL|VBS|VL_DYNAMIC]	For OP_AMP_VF macro: ModuleType:=”VL”.
TolPos	[0-100 %]	“TolPos”=”10” if value not described in component DB.
TolNeg	[0-100 %]	“TolNeg”=”10” if value not described in component DB.
InPositive	[0-N*]	If “InPositive”=”0”: the macro is not executed.
InNegative	[0-N*]	If “InNegative”=”0”: the macro is not executed.
GndPin	[0-N*]	If “GndPin”=”0”: the macro is not executed.
OutPin	[0-N*]	If “OutPin”=”0”: the macro is not executed.
Value	[-100-+100 V]	
TestResult	[Test Result|Force_Pass| Force_Fail|Force_Skip]	
MeasureType	[Normal|Average|RecOnError| Maximum|Minimum|PeakToPeak]	
Recycle	[0-1.000.000]	
Frequency	[0-100.000 Hz]	
InCurrent	[0-0,5 A]	
InVolt	[0-+10 V]	
OffsetV	[-10-+10 V]	
Quality	[0-100 %]	
SettlingWave	[0-100]	
View	[0|1|2]	

* N=8.192 For systems other than Flying Probes

3.1.28 OP_AMP_GAIN (macro written in VL)

OP_AMP_GAIN	Parameter range	Note
Name	[String]	Component name present in the CAD data and in component DB. (Field “Component” in file *.par)
ClusterName	[String]	For COMPARATOR macro: “ClusterName”:=”opagain”.
ModuleType	[NONE|VL|VBS|VL_DYNAMIC]	For OP_AMP_GAIN macro: ModuleType:=”VL”.
TolPos	[0-100 %]	“TolPos”=”10” if value not described in component DB.
TolNeg	[0-100 %]	“TolNeg”=”10” if value not described in component DB.
InPin	[0-N*]	If “InPin”=”0”: the macro is not executed.
GndPin	[0-N*]	If “GndPin”=”0”: the macro is not executed.
OutPin	[0-N*]	If “OutPin”=”0”: the macro is not executed.
ClusterName	[String]	For COMPARATOR macro: “ClusterName”:=”Comparator”.
Value	[-100-+100 V]	
Gain	[0-10.000]	
TestResult	[Test Result|Force_Pass| Force_Fail|Force_Skip]	
MeasureType	[Normal|Average|RecOnError| Maximum|Minimum|PeakToPeak]	
Recycle	[0-1.000.000]	
Frequency	[0-100.000 Hz]	
InCurrent	[0-0,5 A]	
InVolt	[0-+10 V]	
OffsetV	[-10-+10 V]	
Quality	[0-100 %]	
SettlingWave	[0-100]	
View	[0|1|2]	

* N=8.192 For systems other than Flying Probes

3.1.29 GATE (macro written in VL)

GATE	Parameter range	Note
Name	[String]	Component name present in CAD data and in component DB. (Field “Component” in file *.par)
ClusterName	[String]	For macro GATE: “ClusterName”:=”Gate”.
ModuleType	[NONE|VL|VBS|VL_DYNAMIC]	For macro GATE: ModuleType:=”VL”.
Function	[2NAND|2NOR|2AND|2OR|2XOR| 3NAND|3NOR|3AND|3OR|3XOR|NOT| NE_BUF|E_BUF|NE_NBUF|EN_BUF| BUF243|BUF245]	
Family	[Standard|L|S|H|LS|AS|ALS|F|C|HC| HCT|AHC|AHCT|FCT|AC|ACT|ACQ| ACTQ|ABT|GTL|GTLP|ALB|LV|LVC| LVCH|ALVC|LVT|ALVCR|ALVCH|LCX| VCX]	
Vcc	[0-+100 V]	
Pin_A	[0-N*]	
Pin_B	[0-N*]	
Pin_C	[0-N*]	
Pin_D	[0-N*]	
PathPin_A	[String compound with characters: “0”, “1”, “X”, ”L”, “H” and “Z”]	
PathPin_B	[String compound with characters: “0”, “1”, “X”, ”L”, “H” and “Z”]	
PathPin_C	[String compound with characters: “0”, “1”, “X”, ”L”, “H” and “Z”]	
PathPin_D	[String compound with characters: “0”, “1”, “X”, ”L”, “H” and “Z”]	
Vi_H		
Vi_L		
Vo_H		
Vo_L		
TestResult	[Test Result|Force_Pass| Force_Fail|Force_Skip]	
MeasureType	[Normal|Average|RecOnError| Maximum|Minimum|PeakToPeak]	
Recycle	[0-1.000.000]	
Time	[0-1 sec]	
Current	[0-0,1 Ampere]	
Check_A	[String compound with characters: “0”, “1”]	
Check_B	[String compound with characters: “0”, “1”]	
Check_C	[String compound with characters: “0”, “1”]	
Check_D	[String compound with characters: “0”, “1”]	
AnalogView	[1|2|3|4]	

* N=8.192 for systems other than Flying Probes

3.1.30 DIGPIN (macro written in VL)

DGPIN	Parameter range	Note
Name	[String]	Not relevant for DIGPIN macro
ClusterName	[String]	For DIGPIN macro: "ClusterName":="DigPin".
ModuleType	[NONE|VL|VBS|VL_DYNAMIC]	For GATE macro: ModuleType:="VL".
PinDig	[0-N*]	
ValueH	[0-0,5 Ampere]	
TolH	[0-100 %]	
ValueL	[0-0,5 Ampere]	
TolL	[0-100 %]	
ValueZ	[0-0,5 Ampere]	
TolZ	[0-100 %]	
ValueAnalog	[0-100 Volt]	
TolAnalog	[0-100 %]	
ValueFreq	[0-10000000 Hertz]	
TolFreq	[0-100 %]	
TestResult	[Test Result|Force_Pass| Force_Fail|Force_Skip]	
MeasureType	[Normal|Average|RecOnError| Maximum|Minimum|PeakToPeak]	
Recycle	[0-1.000.000]	
StrobeTime	[0-10 sec]	

* N=8.192 for systems other than Flying Probes

3.1.31 CLUSTER (macro written in VL)

CLUSTER	Parameter range	Note
Name	[String]	Component name included in the CAD data and in the component DB. (Field “Component” in file *.par). There must be a file with extension ”.pat” containing a cluster named: “Name”, to execute the check on the component in section “CLUSTER”.
ModuleType	[NONE|VL|VBS|VL_DYNAMIC]	For macro CLUSTER: ModuleType:=”VL”.
Value	[-99999999999÷99999999999]	Value of the scale to be checked for the component. This value can be found in the CAD data and in the Board CAD data base. (Field“Value” in file “name.par” in CAD data of Seica format)
PinList	[List of channels belonging to interval: 0-N]	Use character “-” to list channels belonging to a group.

* N=8.192 for systems other than Flying Probes

3.1.32 CLUSTERDIA (macro written in VL)

CLUSTERDIAG	Parameter range	Note
Name	[String]	Component name included in the CAD data and in the component DB. (Field “Component” in file *.par). There must be a file with extension ”.pat” containing a cluster named: “Name”, to execute the check on the component in section “CLUSTER”.
ModuleType	[NONE|VL|VBS|VL_DYNAMIC]	For macro CLUSTERDIAG: ModuleType:=”VL”.
Value	[-99999999999÷99999999999]	Value of the scale to be checked for the component. This value can be found in the CAD data and in the Board CAD data base. (Field “Value” in file “name.par” in CAD data of Seica format)
PinList	[List of channels belonging to interval: 0÷N]	Use character “-” to list channels belonging to a group.
EnableProbe	[NO|YES]	To disable/enable the use of the digital probe.
EnableDictionary	[NO|YES]	To disable/enable the use of the diagnostic dictionary.

* N=8.192 for systems other than Flying Probes

3.1.33 ASKUSER (macro written in VBS)

ASKUSER	Parameter range	Note
ModuleType	[NONE|VL|VBS|VL_DYNAMIC]	For macro ASKUSER: ModuleType:="VBS".
Title	[String]	Title of dialogs displayed.
Prompt	[String]	Message displayed into dialog "InputBox".
DefaultValue	[LowestValue ÷ HighestValue]	Default value suggested by dialog: "InputBox".
LowestValue	[0÷N]	Lowest value in the value range accepted by dialog "InputBox"
HighestValue	[0÷N]	Highest value in the value range accepted by dialog "InputBox"
ErrorMessage	[String]	Message displayed if the input value is not included in the interval: [LowestValue - HighestValue], or if button "Cancel" in the dialog is selected.
AskConfirm	[NO|YES]	Disables/Enables the confirm message display.
ConfirmMessage	[String]	Confirm message displayed if: "AskConfirm"="YES".
ShowedIcon	[Critical|Question| Exclamation|Information]	Icons displayed in the confirm message dialog.
ShowedButton	[OK|OKCancel| AbortRetryIgnore| YesNoCancel|YesNo| RetryCancel]	Buttons displayed in the confirm message dialog.
DefaultButton	[Button1|Button2|Button3]	Indicates the return code output of the dialog used to ask to confirm the edited input value when instead of selecting a button the key "Enter" is pressed on keyboard.
ShowOnInfo	[NO|YES]	Disables/Enables the display of message defined with parameter"InfoMessage" in page "Info", which refers program runtime information.
InfoMessage	[String]	Confirm message displayed if: "ShowOnInfo"="YES".
ShowOnReport	[NO|YES]	Disables/Enables the display of message defined by parameter "Report Message" in the page "Report", which refer information after program execution.
ReportMessage	[String]	Confirm message displayed if: "ShowOnReport"="YES".

3.1.34 MESSAGE (macro written in VBS)

MESSAGE	Parameter range	Note
ModuleType	[NONE|VL|VBS|VL_DYNAMIC]	For macro MESSAGE: ModuleType:="VBS".
Message	[String]	Message displayed in "MsgBox", only if parameter "ProgramPause" has value: "YES".
ShowOnInfo	[NO|YES]	Disables/Enables the display of message defined with parameter "Message" in the page "Info", which refers the program runtime information.
ShowOnReport	[NO|YES]	Disables/Enables the display of message defined by parameter "Report Message" in the page "Report", which refer information after program execution.
ProgramPause	[NO|YES]	Disables/Enables a pause during macro execution, performing a display through dialog "MsgBox".
Title	[String]	Title of box message displayed
ShowedIcon	[Critical|Question|Exclamation|Information]	Icons displayed in confirm message dialog.
ShowedButton	[OK|OKCancel|AbortRetryIgnore|YesNoCancel|YesNo|RetryCancel]	buttons displayed in confirm message dialog.
DefaultButton	[Button1|Button2|Button3]	Indicates return code of the dialog used to ask to confirm the edited input value when instead of selecting a button, the key "Enter" is pressed on keyboard.

3.1.35 DISCHARGE (macro written in C)

DISCHARGE	Parameter range	Note
Value	[0÷1 F]	Capacitive value to be discharged.
Pin1	[0÷N*]	Channel connected to a pole of the capacity to be discharged. If “Pin1”=“0”: the macro is not executed.
Pin2	[0÷N*]	Channel connected to a pole of the capacity to be discharged. If “Pin2”=“0”: the macro is not executed.
Current	[1÷0,5 A]	Discharge current value
Time	[0÷1 sec]	
TestResult	[Test Result|Force_Pass| Force_Fail|Force_Skip]	

* N=8.192 for systems other than Flying Probes

3.1.36 _SOLD1 (macro written in C language)

__SOLD1	Parameter range	Note
SolderJoint	[[0-N]]	Defined by the system.
PreHeatPw1	[0-25/60 Watt]	25/60 Watt depends on laser unit installed on system. Step:= 0,5 Watt.
PreHeatPw2	[0-100 %]	25/60 Watt depends on laser unit installed on system. Step:= 0,5 Watt.
PreHeatTime	[0-30 sec]	Step:= 0,001 sec.
SoldertPw1s	[0-25/60 Watt]	25/60 Watt depends on laser unit installed on system. Step:= 0,5 Watt.
SolderPw2	[0-100 %]	25/60 Watt depends on laser unit installed on system. Step:= 0,5 Watt.
SolderTime	[0-30 sec]	Step:= 0,001 sec.
PSSoldPw1s	[0-25/60 Watt]	25/60 Watt depends on laser unit installed on system. Step:= 0,5 Watt.
PSSoldPw2	[0-100 %]	25/60 Watt depends on laser unit installed on system. Step:= 0,5 Watt.
PSSOLDTime	[0-30 sec]	Step:= 0,001 sec.
PreWireNear	[0-10 mm]	Step:= 0,001 mm.
SoldWireNear	[0-10 mm]	Step:= 0,001 mm.
WireLength	[0-10 mm]	Step:= 0,001 mm.
WireLengAdj	[0-n]	Step:= 0,1.
SpotDiameter	[0,2-3,5/0,4-4,5 mm]	0,2-3,5/0,4-4,5 depends on laser unit installed on system. Step:= 0,1 mm.
PinDiameter	[0,2-∞ mm]	Step:= 0,1 mm.
HeadRotation	[-10°-+190°]	Step: 1° default: 0
SheadRotation	[-10°-+190°]	Step: 1° default: 0
PCBDistance	[0-50 mm]	Step:= 0,5 mm.
PwReductionF	[-100-+100]	Step: 1
ProcessSimul	[0|1]	

3.1.37 _SOLD (macro written in C language)

__SOLD	Parameter range	Note
SolderJoint	[[0-N]]	Defined by the system
PreHeatPower	[0-25/60 Watt]	25/60 Watt depends on laser unit installed on system. Step:= 0,5 Watt.
PreHeatTime	[0-30 sec]	Step:= 0,001 sec.
SoldertPower	[0-25/60 Watt]	25/60 Watt depends on laser unit installed on system. Step:= 0,5 Watt.
SolderTime	[0-30 sec]	Step:= 0,001 sec.
PSSoldPower	[0-25/60 Watt]	25/60 Watt depends on laser unit installed on system. Step:= 0,5 Watt.
PSSoldTime	[0-30 sec]	Step:= 0,001 sec.
WireNear	[0-10 mm]	Step:= 0,001 mm.
WireLength	[0-10 mm]	Step:= 0,001 mm.
SolderStep	[0-n]	Step:= 0,1.
SpotDiameter	[0,2-3,5/0,4-4,5 mm]	0,2-3,5/0,4-4,5 depends on laser unit installed on system. Step:= 0,1 mm.
PinDiameter	[0,2-∞ mm]	Step:= 0,1 mm.
HeadRotation	[-10°-+190°]	Step: 1° default: 0
SheadRotation	[-10°-+190°]	Step: 1° default: 0
PCBDistance	[0-50 mm]	Step:= 0,5 mm.
ProcessSimul	[0|1]	Step: 1

3.2 Functions in Programming Environment

This paragraph is dedicated to the functions of the VIVA Software Programming Environment The view that can be obtained in Programming Environment points out the macros that make up a function and the patterns associating the function to the board components and devices.

In Programming Environment, selecting the function are displayed:

- "Associated Macros" (macros making up the function)
- "Patterns" (rules to associate the function to components or devices)

The pattern syntax is:

aaaaaaaa	identifies the **device** to whom the function must be associated. (all the components belonging to devices with name: aaaaaaaa).
aaa*	identifies the **device** to whom the function must be associated. (all the components belonging to devices whose name begins with: aaa).
##aaaaaaaa	identifies the **component** to which the function must be associated. (component name:aaaaaaaa)
##aaa*	identifies the **component** to whom the function must be associated. (all the components whose name begins with: aaa)

The views provided in this manual represent the Programming Environment status soon after the VIVA software is installed. After installing the software, the user can modify the environment configuration to fit his own manufacturing necessities.

```
Function: Resistor

[-] Functions
 +------[-] Resistor
        +----[-] Asscociated Macros
        |        +--DIODE
        +----[-] Patterns
                 +--##R*
                 +--##TRIM*
                 +--RES*
                 +--RESIST*
                 +--TRIM*
```

```
Function: Capacitor

[-] Functions
 +------[-] Capacitor
        +----[-] Asscociated Macros
        |        +--CAPACITOR
        +----[-] Patterns
                 +--##C*
                 +--CAP*
                 +--CAPAC*
                 +--ELCAP*
```

```
Function: Inductance

[-] Functions
 +------[-] Inductance
        +----[-] Asscociated Macros
        |        +--INDUCTOR
        +----[-] Patterns
                 +--##L*
                 +--IND*
```

```
Function: Transformer

[-] Functions
 +------[-] Transformer
        +----[-] Asscociated Macros
        |        +--RANSFORMER
        +----[-] Patterns
                 +--##TR*
                 +--RANSF*
```

Function: Relais

```
[-] Functions
 +------[-] Relais
        +----[-] Asscociated Macros
        |        +--RELAIS
        +----[-] Patterns
                 +--##K*
                 +--##RL*
                 +--K*
```

Function: Diode

```
[-] Functions
 +------[-] Diode
        +----[-] Asscociated Macros
        |        +--DIODE
        +----[-] Patterns
                 +--##CR*
                 +--##D*
                 +--##GR*
                 +--##LD*
                 +--##LED*
                 +--DIODE*
```

Function: Transistor

```
[-] Functions
 +------[-] Transistor
        +----[-] Asscociated Macros
        |        +--TRANSISTOR
        |        +--DIODE
        |        +--DIODE2
        +----[-] Patterns
                 +--##Q*
                 +--##T*
                 +--RANSIST*
                 +--RP*
```

Function: Mosfet

```
[-] Functions
 +------[-] Mosfet
        +----[-] Asscociated Macros
        |        +--TRANSISTOR
        +----[-] Patterns
                 +---##JF*
                 +--##MF*
                 +--##QF*
                 +--##M*
                 +--FET*
                 +--JFET*
                 +--MOSFET*
```

Function: Zener

```
[-] Functions
 +------[-] Zener
        +----[-] Asscociated Macros
        |        +--ZENER_DIR
        |        +--ZENER
        +----[-] Patterns
                 +---##DZ*
                 +--##Z*
                 +--Z*
```

Function: SCR

```
[-] Functions
 +------[-] SCR
        +----[-] Asscociated Macros
        |        +--SCR_ON
        |        +--SCR_OFF
        |        +--SCR_ON_INV
        |        +--SCR_OFF_INV
        +----[-] Patterns
                 +--SCR*
```

```
Function: TRIAC

[-] Functions
 +------[-] TRIAC
          +--[-] Asscociated Macros
          |      +--TRIAC_ON
          |      +--TRIAC_OFF
          |      +--TRIAC_ON_INV
          |      +--TRIAC_OFF_INV
          +--[-] Patterns
                 +--TRC*
```

```
Function: Connectors

[-] Functions
 +------[-] Connectors
          +--[-] Asscociated Macros
          |      +--CONNECTOR
          +--[-] Patterns
                 +--##DIN*
                 +--##J*
                 +--##SC*
                 +--##SP*
                 +--CON*
```

```
Function: Jumper

[-] Functions
 +------[-] Jumper
          +--[-] Asscociated Macros
          |      +--JUMPER
          +--[-] Patterns
                 +--##I*
                 +--##JP*
                 +--##W*
                 +--JUMP*
                 +--JUMPER*
```

```
Function: Fuse

[-] Functions
 +------[-] Fuse
          +--[-] Asscociated Macros
          |      +--FUSE
          +---[-] Patterns
                 +--##F*
                 +--##SW*
                 +---FUSE*
```

```
Function: Oscillator

[-] Functions
 +------[-] Oscillator
          +--[-] Asscociated Macros
           |      +---CRYSTAL
          +--[-] Patterns
                 +--##QZ*
                 +--##XT*
                 +--##Y*
                 +--OSC*
                 +--XTAL*
```

```
Function: Optoisolator

[-] Functions
 +------[-] Optoisolator
          +----[-] Asscociated Macros
          |        +--OPTOISOLATOR
          +----[-] Patterns
                   +--OPT*
```

Function: VoltageRegulator

```
[-] Functions
 +------[-] VoltageRegulator
          +--[-] Asscociated Macros
          |      +--VOLTAGE_REG
          +--[-] Patterns
                 +--VR*
```

Function: OpAmp

```
[-] Functions
 +------[-] OpAmp
          +--[-] Asscociated Macros
          |      +--COMPARATOR
          |      +--OP_AMP_VF
          |      +--OP_AMP_GAIN
          +--[-] Patterns
                 +--LM*
```

Function: Fan

```
[-] Functions
 +------[-] Fan
          +--[-] Asscociated Macros
          |      +--FNODE
          +--[-] Patterns
```

Function: AUTIC

```
[-] Functions
 +------[-] Fan
          +--[-] Asscociated Macros
          |      +--AUTIC
          +--[-] Patterns
```

Function: JScan

```
[-] Functions
 +------[-] Jscan
          +--[-] Asscociated Macros
          |      +--JSCAN (or DIODE)
          +--[-] Patterns
```

Function: OpenFix

```
[-] Functions
 +------[-] OpenFix
          +--[-] Asscociated Macros
          |      +--OPENFIX
          +--[-] Patterns
```

Function: PowerOn

```
[-] Functions
 +------[-] PowerOn
          +--[-] Asscociated Macros
          |      +--POWER
          +--[-] Patterns
```

Function: PowerOff

```
[-] Functions
 +------[-] PowerOff
          +--[-] Asscociated Macros
          |      +--POWER
          +--[-] Patterns
```

Function: POWERCHECK

```
[-] Functions
 +------[-] POWERCHECK
          +--[-] Asscociated Macros
          |      +--POWER_CHECK
          +--[-] Patterns
```

Function: Discharge

```
[-] Functions
 +------[-] Discharge
          +--[-] Asscociated Macros
          |      +--DISCHARGE
          +--[-] Patterns
```

Function: Cluster

```
[-] Functions
 +------[-] Cluster
          +--[-] Asscociated Macros
          |      +--CLUSTER
          +--[-] Patterns
                 +--CLUSTER*
```

Function: ClusterDia

```
[-] Functions
 +------[-] ClusterDia
          +--[-] Asscociated Macros
          |      +--CLUSTERDIA
          +--[-] Patterns
                 +--CLUSTERDIA*
```

Function: Contact

```
- Functions
 +------- - Contact
          +-- - Asscociated Macros
          |     +--CONTACT
          +-- - Patterns
```

Function: Continuity

```
- Functions
 +------- - Continuity
          +-- - Asscociated Macros
          |     +--CONTINUITY
          +-- - Patterns
```

Function: Short

```
- Functions
 +------- - Short
          +-- - Asscociated Macros
          |     +--SHORT
          +-- - Patterns
```

Function: Isolation

```
- Functions
 +------- - Discharge
          +-- - Asscociated Macros
          |     +--ISOLOATION
          +-- - Patterns
```

Function: Digital

```
- Functions
 +------- - Digital
          +-- - Asscociated Macros
          |     +--CLUSTER
          +-- - Patterns
                +--##C
                +--##J
                +--52*
                +--74*
                +--BC*
                +--BF*
                +--DIGITAL*
                +--MC*
                +--OQ*
                +--QFP*
```

Function: Gate

```
- Functions
 +------- - Gate
          +-- - Asscociated Macros
          |     +--GATE
          +-- - Patterns
                +--54*
```

Function: Soldering

```
- Functions
 +------- - Soldering
          +-- - Asscociated Macros
                +--_SOLD
          +-- - Patterns
```

Function: VIsion

```
- Functions
 +------- - Vision
          +-- - Asscociated Macros
          |       +--VISION
          +-- - Patterns
```

Function: Trimmer

```
- Functions
 +------- - Xyyyyy
          +-- - Asscociated Macros
          |       +--RESISTOR
          +-- - Patterns
```

Function: Xxxxx

```
- Functions
 +------- - Xxxxx
          +-- - Asscociated Macros
          |       +--XXXXXXX
          +-- - Patterns
```

The following tables shows, for each macro, the name of the VIVA function that uses it.

Tab. 3-2 - VIVA: macros and functions

Macros \ **Functions**	Resistor	Trimmer	Capacitor	Inductance	Diode	Transistor	Mosfet	Zener	Scr	Triac	Oscillator	Relais	Transformer	Clock	Connector	Contact	Continuity	Discharge	Jumper	Optoisolator	Fuse	Gate	Fan	Autic	JScan
RESISTOR	x	x																							
CAPACITOR			x																						
INDUCTOR				x																					
DIODE					x	x																			x
DIODE_INV																									
DIODE_2						x																			
DIODE_2_INV																									
TRANSISTOR						x	x																		
ZENER								x																	
ZENER_DIR								x																	
SCR_ON									x																
SCR_OFF									x																
SCR_ON_INV									x																
SCR_OFF_INV									x																
TRIAC_ON										x															
TRIAC_OFF										x															
TRIAC_ON_INV										x															
TRIAC_OFF_INV										x															
CRYSTAL											x														
RELAIS																									
TRANSFORMER													x												
CLOCK														x											
CONNECTOR															x										
CONTACT																x									
CONTINUITY																	x								
DISCHARGE																		x							
JUMPER																			x						
OPTOISOLATOR																				x					
FUSE																					x				
GATE																						x			
FNODE																							x		
AUTIC																								x	
JSCAN																									x

Macros \ Functions	PowerOn	PowerOff	PowerCheck	VoltageRegulator	OpAmp	OpenFix	Continuity	IOsolation	Short	Contact	Cluster	ClusterDia	Digital	Discharge	Connector	Vision	Soldering								
POWER	x	x																							
POWER_CHECK	x		x																						
VOLTAGE_REG				x																					
COMPARATOR					x																				
OP_AMP_VF					X																				
OP_AMP_GAIN					X																				
OPENFIX						x																			
OPENFIX_PARSE						x																			
CONTINUITY							x																		
ISOLATION								x																	
SHORT									x																
CONTACT										x															
CLUSTER											x		x												
CLUSTERDIA												x													
DISCHARGE														X											
CONNECTOR															x										
VISION																x									
_SOLD																	!*								
_SOLD1																	!*								
ASKUSER																									
MESSAGE																									

!* La funzione Soldering può contenere la macro SOLD o la macro_SOLD1.

3.2.1 Complex functions and devices

The Patterns, available in the Programming Environment are a way to associate the functions to components and devices listed and described in the UUT CAD data

Another way to associate the functions to components and devices is the use of the "Complex Devices". (in the VIVA Graphical User Interface these "Complex Device", are also known as "Complex Components": so the two terms must be considered equivalent).

- A complex device identifies a component type that can be decomposed in one or more subcomponents: SUB1, SUB2, …SUBn.
- Each component is defined by:
  1. the number of pins used
  2. for each pin used, the pin id number in the complex component numbering
  3. the function associated to the checks of the singular subcomponent. The function must be included in the list of available functions in the Programming Environment.
- In the VIVA Graphical User Interface, the function with name <Complex> is associated to the complex device in order to distinguish this kind of functions from those available in the Programming Environment.
- In the Debug Environment the name of the section associates to the complex device is the name of the function associated to the first "sub device" (SUB*1*) of the complex device.

The chapters from 3.3.2 to 3.3.4 Refer examples of use of the complex devices. For further details on complex devices, please refer to the online documentation of the VIVA Software.

3.3 System macro use

This chapter contains a few paragraphs to sample how to:

- Delete and add macros to a function.
- Create a new function.
- Insert a new component in the board data base.
- Assign a function to the added component.
- Etc….

As a preface to the following paragraphs, a brief introduction will provide an overview of the system macro context and their use in VIVA programs.

Fig. 3-1 shows the flowchart of the three phases needed to develop and use a testing program in the VIVA environment. On the right side of the flow chart, are pointed out the groups of relevant data to define: the components to be tested, the functions used for the test, the system macro used, the functions and values assigned to macro parameters.

In particular:

External CAD data files

These are the CAD data of the board under test, containing all necessary information to locate the nodes, and the values to be verified. As an example, you will find the description of the fields in use in the CAD Seica format, which schedules two kinds of records: one to identify the nodes physically and the other to identify the components that form the board.

Below, the fields of the records containing information about the nodes of a board:

SIGNAL	Identifies the name of the signal present on the node, it is a reference to the electrical schemes of the board.
COMPONENT	Identifies the name of the component associated to the node. Together with the "**PIN"** attribute, it identifies univocally the name of the node.
PIN	Identifies the pin number of the component associated to the node. Together with the attribute "COMPONENT", it identifies univocally the node name.
X	Identifies, in the space X,Y containing the board, the x-axis of the node. Together with the attribute "Y", it identifies the node location.
Y	Identifies, in the space X,Y containing the board, the y-axis of the node. Together with the attribute "X" it identifies the node location.
PAD	Defines the size and shape of the PAD associated to the node.
POS	Indicates the board side where the node is located (T for Top, B for Bottom O for bOth).
TECN	Identifies the technology of the component mounted on the node (T for Trough hole and S for SMD).
TEST	Identifies the scheduled elaboration on the node (Y for Test and N for Don't test).
CHANNEL	Node id number (also called Channel) defined by the system. This field is not relevant in the external CAD files and is filled-in during the import data phase into the Board CAD data base

All the fields (10) must be filled in! In case of missing information, the field **must** be filled in with the ascii character *zero* (0).

Here below are listed the fields of records containing information about board components:

COMPONENT	Identifies the name of the component associated to the node. It is the same name present in the field "Component" of the record identifying the node on the board.
DEVICE[20]	Identifies a class (or kind) of components. In the VIVA environment, a function is associated to each "DEVICE" in order to test the components belonging to "DEVICE".
VALUE	Identifies the parameter value of the component to be tested.
UNIT	Identifies the measure unit of the parameter to be verified.
TOL+	Identifies the positive tolerance of the value to be verified.
TOL-	Identifies the negative tolerance of the value to be verified.
NRPIN	Identifies the whole pin number of the component.
MACRO/FUNCTION	Identifies the macro or the function associated to the component. If the field is not filled in, the function associated to the component is the one indicated in "Function & Macro data base"

The first seven fields must be filled in! In case of missing information, the field **must** be filled in with the ascii character *zero* (0). Only the field "MACRO/FUNCTION" can be left empty.

Board CAD data base

These information are referred to the board to be tested, containing the information needed to locate the nodes, and the values that have to be verified. It's the same kind of information that can be found in the "External CAD data files" but recorded in the board data base. The introduction can be done through the "Import CAD data" function or the "Import Manual Data" function

Function & Macro data base

These information are referred to the definition of functions, associated components, associated macros and the value of macro parameters. The Information included in this group of data, together with those included in the "Board CAD data base" are used to create the testing program identified by the series of data "Program data base".

Program data base

These information are referred to the testing program; they are located in the system data base. These information contain all data used during the program execution. Data have been generated through "Create Program" execution and modifications introduced by the user manually or executing the program in "Autodebug" or "Autolearn" mode.

External CAD data files& XML Program data file

This group contains two kinds of information: those related to board CAD data and those related the program generated and verified with the information fixed at the "Export Data" execution.

- The information related to board CAD data are stored in CAD files providing the information needed to locate the nodes on the board, and the values that must be verified. The kind of information is the same as "External CAD data files" information and can be use to execute the "Import CAD Data" function.
- Information related to the created program consist of a program description ("*.XML".format). The program "*.XML" format, can be used during "Create Program" execution, selecting the button: "Update Program …" instead of the button: "Create Program !".

[20] In "Board CAD data base" can be found "Complex deviced", that identify devices made up by one or more parts (SUB*i*). Each part (SUB*i*) has associated the device pins forming the part and the macro used to test the part. These "Complex Devices" are created and introduced only in "Board CAD data base" and are not introduced in the "External CAD data files".

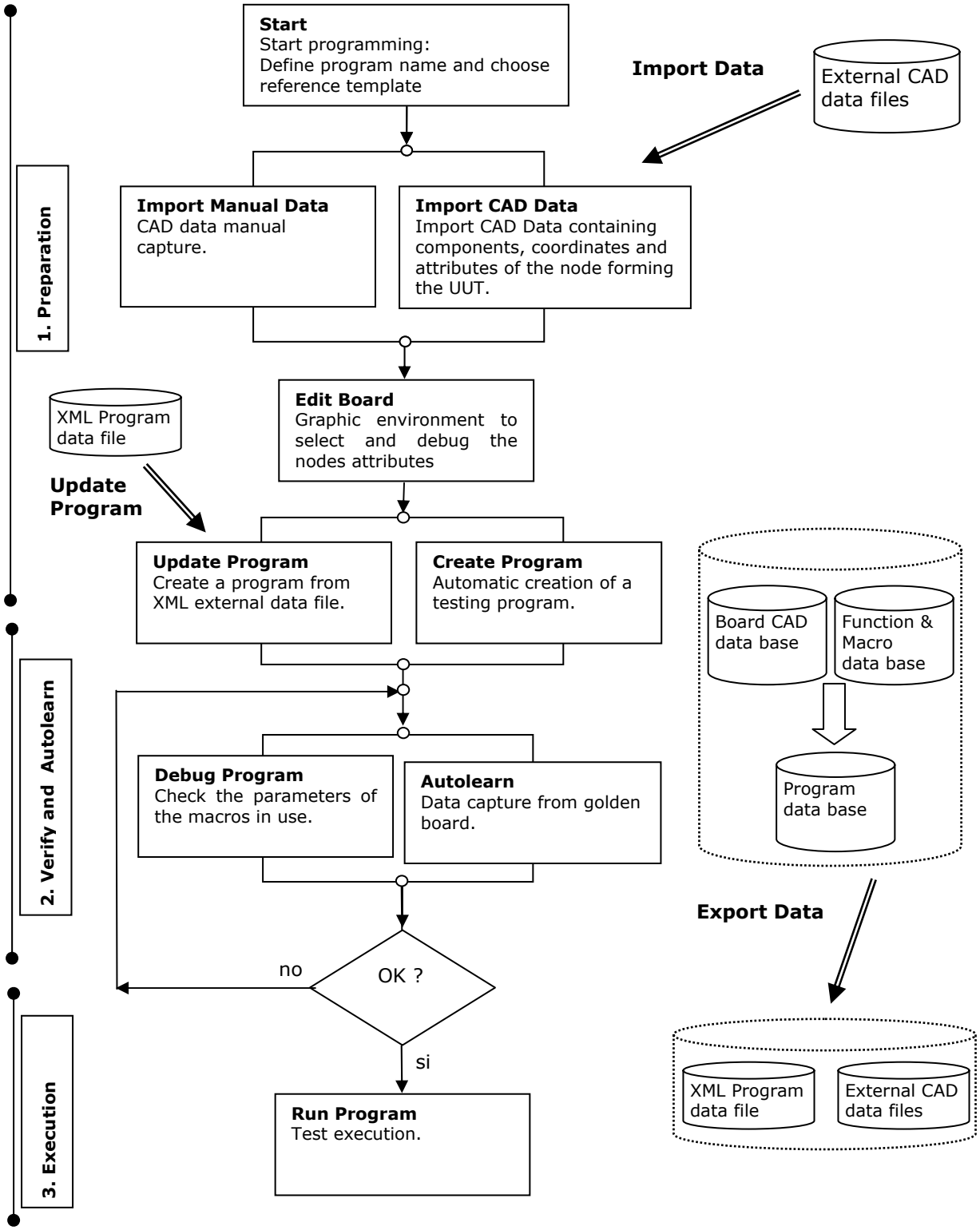

Fig. 3-1 - VIVA: Program Preparation, Verification and Execution

Reference data used in the examples of the following paragraphs.

The first two tables contain the records of the "External CAD data files" used in the examples provided below.

Records of the file "*.nod" used in the examples:

SIGNAL	COMP.	PIN	X	Y	PAD	POS	TECN	TEST	CHANNEL
……	……	..	……..	……..	……..	.	.	.	…
"ANODEDI1"	"DI1"	1	170,000	185,000	R39H23	T	T	Y	573
"ANODEDI2"	"DI2"	1	170,000	187,000	R39H23	T	T	Y	574
"CATODEDI1"	"DI1"	2	172,000	185,000	R39H23	T	T	Y	575
"CATODEDI2"	"DI2"	2	172,000	187,000	R39H23	T	T	Y	576
"ACDC1_AC"	"ACDC1"	1	175.000	187.000	R31H23	O	T	Y	652
"ACDC1_DCA"	"ACDC1"	2	175.000	186.000	R31H23	O	T	Y	653
"ACDC1_DCB"	"ACDC1"	3	175.000	185.000	R31H23	O	T	Y	653
"ACDC1_DC+"	"ACDC1"	4	175.000	184.000	R31H23	O	T	Y	654
"ACDC2_AC"	"ACDC2"	1	177.000	187.000	R31H23	O	T	Y	655
"ACDC2_DCA"	"ACDC2"	2	177.000	186.000	R31H23	O	T	Y	656
"ACDC2_DCB"	"ACDC2"	3	177.000	185.000	R31H23	O	T	Y	656
"ACDC2_DC+"	"ACDC2"	4	177.000	184.000	R31H23	O	T	Y	657
……	……	..	……..	……..	……..	.	.	.	…

Records of the file "*.par" used in the examples:

COMPONENT	DEVICE	VALUE	UNIT	TOL+	TOL-	NRPIN	MACRO/Function
……	……	…….. .	……..		……	.	……
"DI1"	"Diodes"	0.00	V	0.00	0.00	2	
"DI2"	"Diodes"	0.00	V	0.00	0.00	2	
"ACDC1"	"DiodeResistors"	100000.000000	V	0.00	0.00	4	
"ACDC2"	"DiodeResistors"	100000.000000	V	0.00	0.00	4	
"RL1"	"DRelais"	0.00	V	0.00	0.00	4	
"RL2"	"DRelais"	0.00	V	0.00	0.00	4	
…… …….……	…….. ..		……..		……	.	……

Depending on the records described in the two previous tables, the "Import CAD data" phase associates the function "Diode" to devices "Diodes" and"DiodeResistors".

In the dialogue "Assign Function" of the page "Create Program" it is possible to view:

Device	Function	Components
……..	……..	……
DIODERESISTORS	DIODE	ACDC1,ACDC2
DIODES	DIODE	DI1,DI2
……..	……..	……

In the Programming Environment, the item "Patterns" of the "Diode" function contains the pattern[21] "DIODE*" which defines the association of the function "Diode" to all devices whose name begins with the string "DIODE". (hence, also the devices: "Diodes" and "DiodeResistors").

In the "Programming Environment", it is possible to view the "Diode" function structure:

```
- Functions
 +---- - Diode
        +---- - Asscociated Macros
                +--------DIODE
        +---- - Patterns
                +--------##CR*
                +--------##D*
                +--------##GR*
                +--------##LD*
                +--------##LED*
                +--------DIODE*
```

[21] For further details on the "Programming Environment", consult the ondine VIVA documentation.

Depending on the reference CAD data, in the Debug Environment, it is possible to view the "Diode" section structure.

The "Diode" section identifies the execution of the "Diode" function during program execution on all the components belonging to the devices having associated the function "Diode".

Executing the function "Diode" on a component, identifies of the macros that make up the "Diode" function. (In this case the function "Diode" is made up by a single macro named "DIODE").

Views of the test sections in the Debug Environment:

```
- DIODE
 +----- - DI1
 |        +--------DIODE
 |
 +----- - DI2
 |        +--------DIODE
 |
 +----- - ACDC1
 |        +--------DIODE
 |
 +----- - ACDC2
          +--------DIODE
```

To avoid that, during the "Create Program" phase, the function "Diode" is associated to device "DIODERESISTORS", it is possible to assign to the device a name which can not be included among those considered in the directory "Patterns" of the "Diode" function in the "Programming Environment".
For example:

COMPONENT	DEVICE	VALUE	UNIT	TOL+	TOL-	NRPIN	MACRO/Function
.....	.....	.....	.	.....	.....	.	.....
"DI1"	"Diodes"	0.00	V	0.00	0.00	2	
"DI2"	"Diodes"	0.00	V	0.00	0.00	2	
"ACDC1"	"***XDiodeResistors***"	100000.000000	V	0.00	0.00	4	
"ACDC2"	"***XDiodeResistors***"	100000.000000	V	0.00	0.00	4	
.....	.....	.....	..	.....	.....	.	.....

<u>Device, components and complex devices.</u>

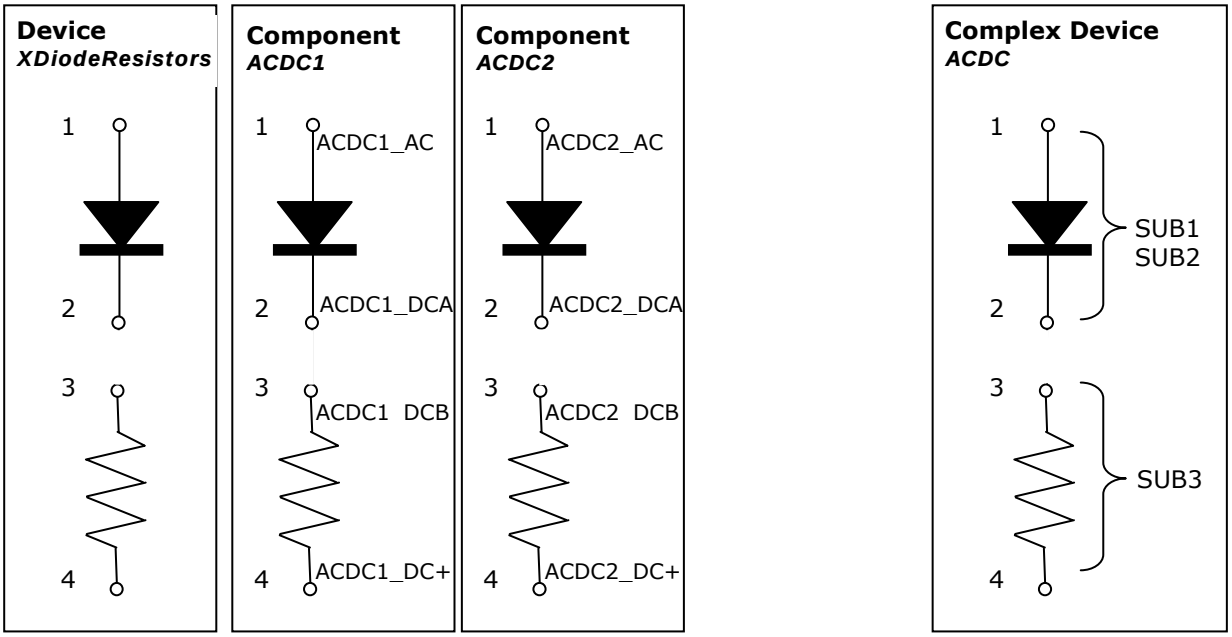

3.3.1 Add functions to the board data base

This paragraph illustrates the basic steps to insert three functions in the board data base.

- Function: "FACDC" Not containing system macros.
- Function: "ACDC_RESISTOR" Containing "RESISTOR" system macro.
- Function: "ACDC_DIODE" Containing system macros: "DIODE" and "DIODE_INV".
-

Programming Environment > Page: "General"

Select the button:" Add Function
Insert: > "Name:"***FACDC*** ☐ Ignore Macro Selection Criteria Button: OK

Select the button:" Add Function
Insert: > "Name:"***ACDC_RESISTOR*** ☐ Ignore Macro Selection Criteria Button:OK

Select the function: *ACDC_RESISTOR* select item: "Associated Macros"
In the section "Macros:" Select the *RESISTOR macro* Select the button <<

Select the button:" Add Function
Insert: > "Name:"***ACDC_DIODE*** ☐ Ignore Macro Selection Criteria Button: OK

Select the function: *ACDC_DIODE* Select the item: " Associated Macros"
In the section "Macros:" Select the macro: *DIODE* Select the button <<
In the section "Macros:" Select the macro: *DIODE_INV* Select the button<<

Select the button:" OK > Exit the dialogue: Programming Environment.

When you see the message: "You have modified some code information in Macro Editor.
Do you want that VIVA recreates your Test Program?

Select the button:" Yes/Si > to exit the dialogue: Programming Environment and allow new program creation.

3.3.2 Add a complex device to the board data base

Wizard Environment > Page: Create Program > Button:" Assign Function ".

Section: "Assign Complex to Selected Components":

Button:" <<Add New " : activates the dialogue: " Complex Components Wizard".

Button:" Add Complex Component "
"Name: "***ACDC***
"Total Pins Number: "***4"***
"Nr. Sub Components: " ***3***
"Function:" "***COMPLEX"***
Button:" Add " Button:" Close ": > exit the dialogue "Add Complex Component".

In the section: "Complex Component List" select the complex component: *ACDC*.
Select: *SUB1* Set pins used for *SUB1. (pin 1 and pin 2).*
Select the function associated to *SUB*1: *FACDC* Button: SAVE
Select: *SUB2* Set pins used for *SUB2. (pin 1 and pin 2).*
Select the function associated to *SUB*2: *ACDC_DIODE* Button: SAVE
Select: *SUB3* Set the pins used for *SUB3. (pin 3 and pin 4).*
Select the function associated to *SUB3*: *ACDC_RESISTOR* Button: SAVE

Button:" Close ": > exit the dialogue " Complex Components Wizard".

Button:" OK ": > exit the dialogue Assign Function".

Below you find the view of the dialogue "Complex Component Wizard" related to the three components of the complex device described in the example. In the view are reproduced also the values and tolerances used by the functions associated to the complex device components.

```
Complex Components list
.....
 [-] ACDC
  +------Sub1
  +------Sub2
  +------Sub3
 [-] nnnn
.......
```

```
Used pins
1
2
0
0
0
0
0
0
```

```
Function
FACDC
```

```
☐ Value:   0   H
☐ TOL+:    0   %
☐ TOL-:    0   %
```

```
Complex Components list
.....
 [-] ACDC
  +------Sub1
  +------Sub2
  +------Sub3
 [-] nnnn
.......
```

```
Used pins
1
2
0
0
0
0
0
0
```

```
Function
ACDCD_DIODE
```

```
☑ Value:   0.75   V
☑ TOL+:    12     %
☑ TOL-:    12     %
```

```
Complex Components list
.....
 [-] ACDC
  +------Sub1
  +------Sub2
  +------Sub3
 [-] nnnn
.......
```

```
Used pins
3
4
0
0
0
0
0
0
```

```
Function
ACDCD_RESISTOR
```

```
☑ Value:   1200   O
☑ TOL+:    5      %
☑ TOL-:    5      %
```

3.3.3 Assign a device to a complex device

Environment: "Wizard Environment" > Page: "Create Program" > Button:"Assign Function ".

Mode: ⊙ Device; > Select: "**Device**:" ***XDIODERESISTORS***

In the section: "Assign Complex to Selected Components": **select the complex device** (e.g. ***ACDC***) to be associated to the selected item. (e.g. *XDIODERESISTORS*).

Select button "Apply": > the view changes from configuration Device Before: to configuration: Device After:

Button OK, > Exit from dialogue "Assign Function" and recreate the program!

If an existing device has been associated to a complex device, the old device is renamed with the complex device name, as shown in the view: "Device After".

Device Before:

Device	**Function**	**Components**
……..	……..	……
XDIODERESISTORS	UNKNOWN	ACDC1,ACDC2
DIODES	DIODE	DI1,DI2
……..	……..	……

Device After:

Device	**Function**	**Components**
……..	……..	……
ACDC	<Complex>	ACDC1,ACDC2
DIODES	DIODE	DI1,DI2
……..	……..	……

After recreating the program, the Device is associated to all the macros belonging to the "Sub Components" functions that make up the complex device.

In the Debug Environment it is possible to view the sections i[22] where the macros associated to complex devices are executed.

```
Debug Environment
…
- FACDC
 +----- - ACDC1
 |        +-- DIODE : 1-2
 |        +-- DIODE_INV : 1-2
 |        +-- RESISTOR : 3-4
 +----- - ACDC2
          +-- DIODE : 1-2
          +-- DIODE_INV : 1-2
          +-- RESISTOR : 3-4
….
```

[22] The name of the section is the name of the function associated to the first "sub device" of the complex device. In the example above, the component "SUB1" has ben created together with the empty function "FACDC" only to increase the program readability, i.e. having a section identifying the complex device and the macros executed on the components belonging to the complex device.

3.3.4 Assign a component to a complex device

Environment: Wizard Environment > Page: "Create Program" > Button:"Assign Function ".

Mode: ⊙ Component; > Select: "**Component**:" ***ACDC1*** *(o ACDC2)*

In the section: "Assign Complex to Selected Components": **select the complex device** (e.g. ***ACDC***) to be associated to the selected item. (e.g. *ACDC1 o ACDC2*).

Select button "Apply": > The view changes from configuration Component Before: to configuration Component After:

Button OK, > Exit dialogue "Assign Function" and recreate the program!

If a component of a pre-existing device has been associated to a complex device, after this, the component will belong to the complex device, as shown in the view: "Component After".

Component Before:

Component	Function	Device	ForcedMacro	Value1	...	TotPinNum
.....	.....	.....	.....	.....	...	.....
ACDC1	UNKNOWN	XDIODERESISTORS		1e+005	...	4
ACDC2	UNKNOWN	XDIODERESISTORS		1e+005	...	4
.....	.....	.....	.....	.....	...	.....

Component After:

Component	Function	Device	ForcedMacro	Value1	...	TotPinNum
.....	.....	.....	.....	.....	...	.....
ACDC1	<Complex>	**ACDC**		1e+005	...	4
ACDC2	UNKNOWN	XDIODERESISTORS		1e+005	...	4
.....	.....	.....	.....	.....	...	.....

After recreating the program, the Component is associated to all the macros belonging to functions of "Sub Components" that make up the complex device

In the Debug Environment it is possible to view the sections[23] where macros associated to complex components are executed.

Debug Environment
(if assignment has been executed only for ACDC1)

```
...
[-] FACDC
 +----[-] ACDC1
 |        +-- DIODE : 1-2
 |        +-- DIODE_INV : 1-2
 |        +-- RESISTOR : 3-4
....
```

Debug Environment
(if assignment has been executed for ACDC1 and for ACDC2)

```
...
[-] FACDC
 +----[-] ACDC1
 |        +-- DIODE : 1-2
 |        +-- DIODE_INV : 1-2
 |        +-- RESISTOR : 3-4
 +----[-] ACDC2
          +-- DIODE : 1-2
          +-- DIODE_INV : 1-2
          +-- RESISTOR : 3-4
....
```

[23] See the note associated to chapter "Assign a device to a complex device"

3.3.5 Changing the system macros belonging to a function

This paragraph explains the basic steps to modify the kind of system macros that form an existing function. In particular, the function "Diode", provided with the software VIVA, contains a single macro which checks the functionality of the Diode-kind components polarized directly. The following steps explain how to modify the function "Diode" so that it verifies the Diode kind components with inverted polarity as well. In other words the function "Diode" has to contain the macros: "DIODE" and "DIODE_INV".

Programming Environment > Page: "General"

Select the function: "***Diode***" Select the item: " Associated Macros"
In the section "Macros:" > Select the macro: "*DIODE_INV*" Select button <<

In the Programming Environment, it is possible to view the "Diode" function structure, before and after the changes.

```
BEFORE

- Functions
 +------- - Diode
        +----- - Asscociated Macros
        |      +--------DIODE
        +----- - Patterns
                +--------##CR*
                +--------##D*
                +--------##GR*
                +--------##LD*
                +--------##LED*
                +--------DIODE*
```

```
AFTER

- Functions
 +------- - Diode
        +----- - Asscociated Macros
        |      +--------DIODE
        |      +--------DIODE_INV
        +----- - Patterns
                +--------##CR*
                +--------##D*
                +--------##GR*
                +--------##LD*
                +--------##LED*
                +--------DIODE*
```

Another way to solve the problem offered in the example could be the definition of a new function, containing the macros "DIODE" and "DIODE_INV", without modifying the function "Diode" provided with the VIVA software.

3.3.6 Assign a function to a component

Wizard Environment> Page: "Create Program" > Button:"Assign Function".

Mode:⊙ Device; > Select: "Device:" e.g.. ***DRelais***
Or:
Mode: ⊙ Component; > Select: "Component:" ***RL1*** *(o RL2)*

In the field "Assign Function to Selected Components" select the function to be associated to the component. (e.g. ***Relays or AUTIC***)

Button OK > Exit the dialogue" Assign Function" and recreate the program!

After creating the program, the Debug Environment shows:

```
Debug Environment
......
- RELAYS
 +------- - RL1
          +--------RELAYS
```

or

```
Debug Environment
......
- AUTIC
 +------- - U2
          +--------AUTIC:5
          +--------AUTIC:6
          +--------AUTIC:8
          +--------AUTIC:i
```

3.3.7 Insert a cluster from Debug Environment

Debug Environment:

Select the previous section to the one to be generated. (e.g. POWERON)
Mouse dx > Add >Section…: Section Name: ***PW1CHECK*** Add

Select section: ***PW1CHECK***
Mouse dx > Add >Functional…: Component Name: ***PW1*** Add

Select component: ***PW1***
Mouse dx > Add >Macro…: Macro Name: ***POWER_CHECK*** Add

You have:

```
Debug Environment
…
[+] POWERON
[-] PW1CHECK
 +----[-] PW1
          +-- POWER_CHECK

….
```

3.3.8 Add a new component in the board data base

This is an example to explain how to add a new component in the board database which updates the "board CAD data base" as well. The records are stored in the "Board CAD data base" and can be found in the files *.par and *.nod created executing the function "Export Data". The exported files are listed as: names: "*Extract_nome-pgm.par*" e "*Extract_nome-pgm.nod*".
(*name_pgm*:= testing program name).

Wizard Environment > Page: "Board Data"

Button: "Add Pins ..." > Activates the dialogue: "Camera Environment", Page: "Autolearn"
Button: "New ☼ " > Activates the dialogue: "Camera Environment", Page: "Add Items Wizard"

Add Items Wizard
Page: "Add Component"

Device ... New Device: **Diodes**
Associated Function: **Diode**
OK
Select Device (function): **Diodes (Diode)**
New Component Name: **DI1** + Add Component
New Component Name: **DI2** + Add Component

Page: "Add Signal"

ANODEDI1 + Add Signal
ANODEDI2 + Add Signal
CATODEDI1 + Add Signal
CATODEDI2 + Add Signal

Page: "Add Pins"

Component	Signal	Ext Diameter	Int Diameter	Pin	Channel	Operation	X	Y
DI1	**ANODEDI1**	**1**	**0,6**	**1**	**573**	+ Add Pin	170.00	185.00
DI1	**CATODEDI1**	**1**	**0,6**	**2**	**574**	+ Add Pin	170.00	185.00
DI2	**ANODEDI2**	**1**	**0,6**	**1**	**575**	+ Add Pin	170.00	185.00
DI2	**CATODEDI2**	**1**	**0,6**	**2**	**576**	+ Add Pin	170.00	185.00

Close ***Add Item Wizard***

According to changes made, and after creating the program, in the Debug Environment it is possible to view the following sections:

```
Debug Environment
...
- DIODE
  +---- - DI1
  |       +--------- DIODE
  |
  +---- - DI2
          +--------- DIODE
....
```

4 Bibliography

[1] ACL Module– Strumenti intnerni
Code: MA-ACLI00IT-02 (11-07-2006) Seica S.p.A.

ACL Module
Codice: MA-ACLI00EN-01 (12-07-2006) Seica S.p.A.

[2] VALID Operator Manual MA-VALI0PEN-00
Code: MA-VALI0PEN-00 (05-07-2006) Seica S.p.A.

VALID Operator Manual MA-VALI0PEN-00
Codice: MA-VALI0PEN-00 (15-11-2006) Seica S.p.A.

[3] Pilot VIP Operator Manual MA-PIVP0PEN-00
Code: MA-PIVP0PEN-00 (02-03-2006) Seica S.p.A.

[4] VIVA Language MA-VIVAVLIT-00
Code: MA-VIVAVLIT-00 (03-02-2006) Seica S.p.A.

[5] Firefly Manuale Operatore MA-FRLY0PIT-02
Codice: MA-FRLY0PIT-00 (14-09-2006) Seica S.p.A.

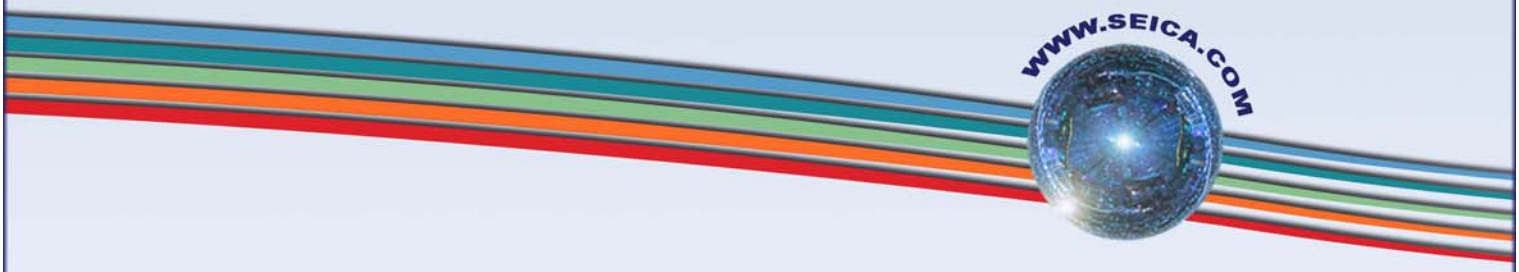

Seica
Test Solutions

SEICA SpA
via Kennedy 24
10019 Strambino - TO
ITALIA
Tel: +39 0125 6368.11
Fax: +39 0125 6368.99
Email: seica@seica.com